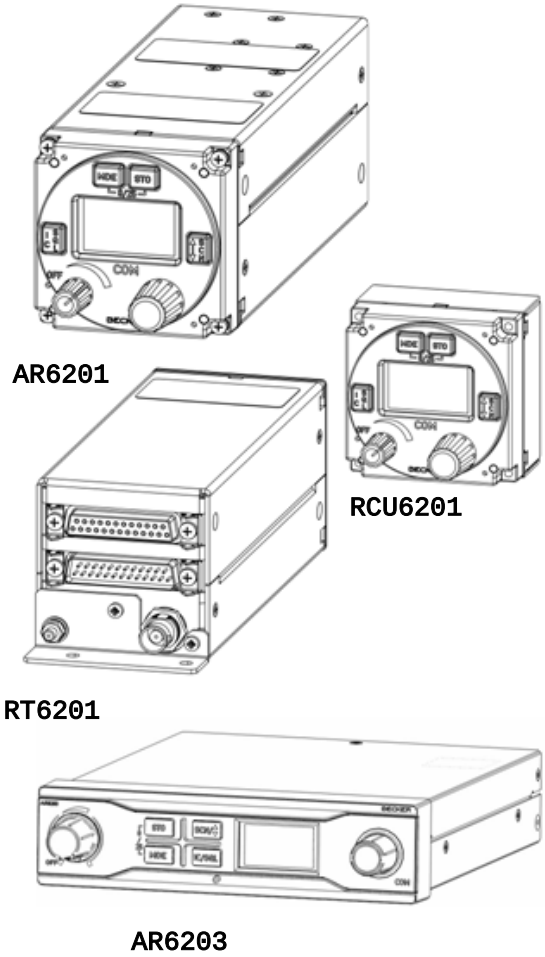

VHF-Transceiver Family

AR6201-(X1X)
AR6201-(X2X)
RT6201-(X10)
RT6201-(X20)
RCU6201-(X1X)
AR6203-(X1X)
AR6203-(X2X)

Software Versions:

SCI1050S305 Version 3.07

SCI1051S305 Version 1.51

and upwards

Installation

Operation

Manual DV 14307.03

Issue 1 September 2013

Becker Avionics GmbH • Baden Airpark B108 • 77836 Rheinmünster • Germany

Telephone +49 (0) 7229 / 305-0 • Fax +49 (0) 7229 / 305-217

http://www.becker-avionics.com • e-mail: info@becker-avionics.de

FIRST ISSUE AND CHANGES

Issue 1 September 2013

LIST OF EFFECTIVE PAGES

Page No.:	Date:	Page No.:	Date:
Cover Page	09/2013		
I … VIII	09/2013		
1-1 … 1-20	09/2013		
2-1 … 2-66	09/2013		
3-1 … 3-20	09/2013		

DV 14307.03 / Article Number 0638.404-071

Preface

Dear Customer,

Thank you for purchasing BECKER products.

We are pleased that you have chosen our product and we are confident that it will meet your expectations.

AR620X-(XXX) VHF Transceivers are a modern family of communication equipment that have comprehensive capabilities and significantly extend the typical aeronautical transceivers.

Despite its small size and weight 620X- aircraft radio include inter alia:

- Sensitive receiver which meets the most recent requirements of ED-23C, including the ability to work in the offset-carrier (climax) operation in 25 kHz and 8.33 kHz channel spacing (class H2).
- Receiver that includes SCAN (dual watch) mode. This allows simultaneous monitoring of two different VHF frequency channels without interrupting communication on the active frequency.
- High efficiency transmitter which delivers more than 10W modulated or un-modulated output power at 28V supply voltage or 6W at 12V. Low power consumption allows longer operation from battery.
- Extended built-in intercom which can work as:
    - 4-way intercom with isolation mode – passengers could continue conversation or listening to music from MP3 player at the same time as pilots talk via intercom or communicate with the tower.
    - 2-way intercom for tandem operation – pilot and co-pilot work with separate controllers and can control their individual audio parameters, like volume or VOX. This mode is preferred especially for training due to full synchronization of LCD contents.
- Non-volatile memory for storing:
    - 99 VHF channels can manually be labeled for storage of VHF channels
    - 9 recently selected VHF channels are automatically stored

Table of Contents

List of Abbreviations

AC ..... Alternating Current

AF ..... Audio Frequency

AR ..... Airborne Radio

ATT .... Attenuation

AUX .... Auxiliary

AWG .... American Wire Gauge

BNC .... Bayonet Neill Concelman

CBIT ... Continuous Built-In Test

CFG .... Configuration

CH ..... Channel

CM ..... Chassis Module

COM .... Communication

DC ..... Direct Current

EASA ... European Aviation Safety Agency

EMI .... Electro Magnetic Interference

ETSO ... European Transmission System Operators

GND .... Ground (Aircraft Ground)

GPS .... Global Positioning System

HMI .... Human Machinery Interface

HIRF ... High Intensity Radiated Fields

IC ..... Intercom

I&O .... Installation & Operation

LCD .... Liquid Crystal Display

MFD .... Multi-Function Display

M&R .... Maintenance & Repair

N/A .... Not Applicable

NAV .... Navigation

PBIT ... Power-On Built In Test

PTT .... Push To Talk

PWR .... Power

RCU .... Remote control unit

RSSI ... Received Signal Strings Indication

RT ..... Remote Transceiver

RX ..... Receive

SQL .... Squelch

SPKR ... Speaker (Loudspeaker)

SRC .... Source

SW ..... Software

TSO .... Technical Standard Order

TX ..... Transmit

VOX .... Voice Operated IC Threshold

VHF .... Very High Frequency

VDC .... Voltage Direct Current

VSWR ... Voltage Standing Wave Ratio

VU ..... Volume Unit

Units

V ..... Volt

mV ..... Millivolt

A ..... Ampere

mA ..... Milliampere

W ..... Watt

mW ..... Milliwatt

kHz .... Kilohertz

MHz .... Megahertz

s ..... Second

dBm .... Power ratio in decibels

dB ..... Decibel

Ohm(W). Resistor

kg ..... Kilogram

t ..... Tons

°C ..... Degree Celsius

mm ..... Millimeter

cm ..... Centimeter

Blank

Section 1 GENERAL DESCRIPTION

1.1 Introduction

This manual describes the operation and installation of the RCU/RT/AR6201 VHF Transceiver Family equipment. The ID label on your device shows the part number for identification purposes.

Before starting to operate the unit(s) please read this manual carefully with particular attention to the description referring to your device(s). This manual also contains several optional elements of the system (second controller for example), that may not be contained in your delivery package and in that case are not applicable.

For simplification of this document the short version “620X” for VHF transceivers and “RCU6201” for the remote controllers will be used instead of the full part number identification.

The manuals DV 14307.03 **I&O** (“Installation and Operation”) and DV 14307.04 **M&R** (“Maintenance and Repair”) contain the following sections:

Section		DV 14307.03 I&O	DV 14307.04 M&R
1	General	X	X
2	Installation	X	X
3	Operation	X	X
4	Theory of Operation	N/A	X
5	Maintenance and Repair	N/A	X
6	Illustrated Parts List	N/A	X
7	Modification and Changes	N/A	X
8	Circuit Diagrams	N/A	X

1.2 Purpose of Equipment

The 620X transceivers enable voice communication between aircrafts or between aircraft and ground using the very high frequency band between 118.000 to 136.9916 MHz respectively 136.9750 with a selectable channel spacing of 25 kHz respectively 8.33 kHz. The wide scope of accessories also allows usage of the 620X VHF transceivers in ground-based applications.

The 620X-(XXX) Transceiver Family is dedicated to applications where low power consumption is required. They are capable to operate from standard 14 VDC and 28 VDC installations and from 12 VDC or 24 VDC batteries.

Ultra low power consumption with extremely wide DC supply voltage range as well as compact and lightweight design allows application for gliders and leisure aircraft up to 2000 kg and balloons.

Built-in 4-seat configurable intercom, transmitter output power up to 10W and option for connection of two controllers in tandem configurations extends the flexibility of 620X VHF transceivers.

The 620X transceivers also provide additional options such as:

- **Intercom functionality** for voice communication between aircraft crew and passengers
- **Squelch functionality** that automatically mutes receiver audio signal until clear signal is received to avoid unwanted audio noise
- **Scan functionality** for simultaneous monitoring of two VHF channels (receive mode)
- **AUX audio input** for connection of additional audio devices like navigation receiver, warning tone generator or MP3 music player.
- **VHF channel database** for easy access to predefined frequency channels
- **Tandem functionality** for synchronized operation of two controllers

1.3 General Notes

In this document the word “frequency” is also used in the sense of “channel name”, as defined in EUROCAE, ED-23B: chapter 1.3.2.

In this document the word “memory channel” or “channel” means a memory place identified by a channel number, where a frequency may be stored for later use.

1.4 Variants Overview

Within the part number, the meaning of “- (XXX)” is:

(0XX) indicates 8.33/25 kHz channel spacing capability

(1XX) indicates only 25 kHz channel spacing capability

(X1X) indicates transmit power 10W at 28V

(X2X) indicates transmit power 6W at 12V

(XX2) indicates white illumination color on a black panel

AR6201 Single Block Transceiver (refer to Figure 1-1)

Part Number	Article No	8.33kHz Mode	Transmit PWR
AR6201-(012)	0631.418-910	yes	10W at 28V
AR6201-(112)	0631.434-910	no	10W at 28V

Part Number	Article No	8.33kHz Mode	Transmit PWR
AR6201-(022)	0636.339-910	yes	6W at 12V
AR6201-(122)	0636.355-910	no	6W at 12V

RT6201 Remote Transceiver (refer to Figure 1-2)

Part Number	Article No	8.33kHz Mode	Transmit PWR
RT6201-(010)	0631.442-910	yes	10W at 28V
RT6201-(020)	0636.312-910	yes	6W at 12V
RT6201–(110)	0638.609-910	yes	10W at 28V
RT6201-(120)	0638.617-910	yes	6W at 12V

RCU6201 Remote Control Unit (refer to Figure 1-3)

Part Number	Article No	8.33kHz Mode	Transmit PWR
RCU6201-(012)	0631.469-910	yes	N/A
RCU6201-(112)	0631.485-910	no	N/A

AR6203 Single Block Transceiver (refer to Figure 1-4)

Part Number	Article No	8.33kHz Mode	Transmit PWR
AR6203-(012)	0630.993-910	yes	10W at 28V
AR6203-(112)	0631.566-910	no	10W at 28V
AR6203-(022)	0636.371-910	yes	6W at 12V
AR6203-(122)	0636.398-910	no	6W at 12V

1.5 Short Description

For Single Configuration the Following Combinations apply:

- AR6201 or AR6203 Single Block Transceiver
- RT6201 Remote VHF Transceiver with controller RCU6201

For Tandem Configuration the Following Combinations apply:

- AR6201 or AR6203 Single Block Transceiver with additional controller RCU6201
- RT6201 Remote VHF Transceiver with controller RCU6201 and additional second controller RCU6201

In tandem configuration two controllers and one transceiver are connected. Tandem configuration is useful for training purposes where

pilot and student have their own controller with full-synchronized views or as separate controllers for pilot and co-pilot.

1.5.1 AR6201 Single Block Transceiver

The AR6201 Single Block Transceiver is a compact and lightweight unit designed for operation in a cockpit environment for both general aviation aircraft and helicopters. The dimensions correspond to the standard instrument diameter of 58 mm (2 ¼ inch). All controls and indicators are located on the front panel.

The equipment connectors and the antenna socket are located at the rear of the units.

The AR6201 should be mounted by means of four screws (rear panel installation).

Figure 1-1: AR6201 Single Block Transceiver; 58 mm (2 ¼ inch) standard instrument cut-out

1.5.2 RT6201 Remote Transceiver

The RT6201 Remote Transceiver is a compact and lightweight single block unit in rectangular shape that contains a VHF transceiver. The dimensions correspond to the standard instrument diameter of 58 mm (2 ¼ inch).

The RT6201 Remote Transceiver can be controlled via its dedicated controller RCU6201 or by a third party controller via MFD (BECKER proprietary protocol required).

Figure 1-2: RT6201 Remote Single Block VHF transceiver, back panel installation

The RT6201 Remote Transceiver is installed by means of the attached mounting provisions and four screws (back panel installation).

1.5.3 RCU6201 Remote Control Unit

The RCU6201 Remote Control Unit is a compact and lightweight unit. The dimensions correspond to the standard instrument diameter of 58 mm (2 ¼ inch).

All controls and indicators are located on the front panel. The equipment connectors are located at the rear of the units.

The controller RCU6201 should be mounted with four screws (rear panel installation).

Figure 1-3: RCU6201 Remote Control Unit; 58 mm (2 ¼ inch) standard instrument cut-out

1.5.4 AR6203 Single Block Transceiver

The AR6203 Single Block Transceiver is designed as a single block unit. AR6203 is designed for operation in a cockpit environment for both general aviation aircraft and helicopters. The dimensions correspond to the **state-of-the-art 160mm (6.3 “) panel mounted design**.

Figure 1-4: AR6203 Single Block Transceiver

All control elements are located on the front panel of the unit. For connection to the aircraft inter-wiring two 25-pin unit connectors and BNC antenna socket are located at the rear of the unit.

The AR6203 should be mounted with the designated mounting kit MK6403-1 (refer to chapter 1.10). Six holes on both sides of the mounting kit frame enable the device to be mounted in the aircraft cockpit.

1.6 Features Overview

Frequency Indication

A liquid crystal display (LCD) provides the frequency indication. The required operating frequency is set with the rotary knob. The relation between the real operating frequency and the displayed frequency is according to standards (ED-23B, chapter 1.3.2). For an overview, refer to the table below.

Operating Frequency (MHz)	Channel Spacing (kHz)	Displayed Frequency	
		8.33 + 25 kHz mixed Mode	25 kHz only Mode
118.0000	25	118.000	118.00
118.0000	8.33	118.005	N/A
118.0083	8.33	118.010	N/A
118.0166	8.33	118.015	N/A
118.0250	25	118.025	118.02
etc.	etc.	etc.	etc.
136.9750	25	136.975	136.97
136.9750	8.33	136.980	N/A
136.9833	8.33	136.985	N/A
136.9916	8.33	136.990	N/A

Audio Outputs

The 620X VHF Transceiver includes four fully configurable outputs:

- Headphone 1 output, rated output power is 300 mW into 75 Ohm.
- Headphone 2 output, rated output power is 200 mW into 75 Ohm.
- Speaker output, rated output power is 4 W into 4 Ohm.
- LINE-OUT output intended for ground station use only

Note: Headphone 2 and speaker output cannot be active at the same time

Mike Inputs

The VHF transceiver has an input for dynamic microphone (DYN_MIKE) and an input for standard microphone (STD_MIKE).

The 620X VHF Transceiver provides four microphone inputs:

- standard microphone input 1 (STD_MIKE1)
- standard microphone input 2 (STD_MIKE2)
- standard microphone input 3 (STD_MIKE3)
- dynamic microphone input (DYN_MIKE)

Each input is able to operate with one single microphone or with two microphones of the same type connected in parallel.

AF Auxiliary Input

The AF auxiliary provides the interface to connect an external audio source (e.g. NAV, music-player) to the transceiver. Interconnection of multiple external audio sources on this particular port requires

additional external decupling/isolation resistors. The external audio is audible only when the transceiver is in receive mode.

The individual audio volume is set directly at the particular external equipment.

Sidetone

The sidetone is available on the headphone output during transmission. The sidetone volume automatically adapts to the intercom volume setting.

Squelch Operation

When enabled the squelch (muting) circuit suppresses weak signals. There are two kinds of squelch methods implemented: carrier squelch and noise squelch. The carrier squelch depends on received signal strength and is adjustable in the installation setup; the noise squelch depends on detected noise level and is adjustable in the pilot setup.

Memory Channels

The memory function allows storage of up to 99+9 frequencies. This memory may contain up to 99 frequencies stored manually or programmed from PC that can be labeled with VHF channel numbers or assigned text label. Additionally the last recently used (active) 9 frequencies are stored automatically as “LAST” channels. A user defined text label can also be assigned for each stored frequency.

Intercom Operation

Aircraft internal communication via connected headsets is provided by the built-in intercom circuit. The 620X has two intercom circuits: “Front row” and “Back row”. A maximum of four headsets can be connected (for example pilot & copilot on first circuit and two passengers on second circuit).

Scan Mode

In scan mode a dual watch function is provided. The device is capable of monitoring frequencies on two channels, active & preset simultaneously. The signal of the active frequency will always be audible, since it will have priority at all times.

Tandem operation

Tandem mode enables operation of two controllers simultaneously. The controllers are synchronized, so that both display the same information

Illumination

The illumination of LCD and push buttons can be controlled either directly from the front panel via the pilots menu or externally via the dimming input lines. If the external dimming is selected, the

illumination curve (brightness to voltage relation) can be adjusted in the installation setup.

LOW BATT Indication

The VHF transceiver monitors power supply voltage. If the supply voltage drops below the adjustable threshold, the display indicates the message “LOW BATT”. If the power supply voltage drops further, emergency operation mode is entered.

Emergency Operation

If the power supply voltage drops below 10.25 V, the VHF transceiver continues operation with degraded performance. In case the power supply drops below 9.0V the unit is automatically switched off.

Built-in Tests PBIT and CBIT

After power-up, the unit performs a self-test (power-up built-in test / PBIT). During PBIT the transceiver displays “WAIT” and the corresponding software versions of both the control head and chassis module.

If faults are detected during PBIT, the error message “FAILURE press any key” is displayed. If no faults are detected the transceiver automatically activates the mode set before last power-off.

During normal operation a continuous built-in test (CBIT) permanently verifies the correct operation of the unit. If a problem is detected during CBIT, an error message will be displayed.

Installation Setup

Configuration of the installation parameters such as mike sensitivity, mike type selection, speaker enable/disable plus other parameters are available via the installation setup.

Service Mode

The service mode is a special configuration mode accessible via RS422 interface with a proprietary serial data communication protocol. This mode is for use by authorized maintenance organizations during aircraft service on ground only.

1.7 Technical Data

1.7.1 Power Supply Data

For 620X units the following data applies:

Nominal supply voltage range .... 11.0 … 30.3 V

extended supply voltage range ... 10.25 V … 32.2V

Emergency operation ..... 9.0 V to 10.25 V

Dimming control ..... 0…14 V or 0…28 V

Typical Power Consumption

	AR620X (X2X) 6W	AR620X (X1X) 10W	RT6201 (X2X) 6W	RT6201 (X1X) 10W	RCU6201 (XXX)
Power “off” @ 12 VDC	≤ 0.10 mA	≤ 0.10 mA	≤ 0.10 mA	≤ 0.10 mA	≤ 0.10 mA
Power “off” @ 27.5 VDC	≤ 0.10 mA	≤ 0.10 mA	≤ 0.10 mA	≤ 0.10 mA	≤ 0.10 mA
Reception stand-by mode @ 13.75 VDC, panel backlight off	≤ 140 mA	≤ 140 mA	≤ 120 mA	≤ 120 mA	≤ 20 mA
Reception stand-by mode @ 27,5 VDC, panel backlight off	≤ 80 mA	≤ 80 mA	≤ 80 mA	≤ 80 mA	≤ 20 mA
Transmit mode @ 13,75 VDC, VSWR=1:1	1.8A at 70% 1.5A at 0%	-	1.8A at 70% 1.5A at 0%	-	≤ 20 mA
Transmit mode @ 27.5 VDC, VSWR=1:1	1.2A at 70% 1.0A at 0%	1.4A at 70% 1.0A at 0%	1.2A at 70% 1.0A at 0%	1.4A at 70% 1.0A at 0%	≤ 20 mA
Absolute maximum current @ 13.75 VDC, VSWR=3:1	≤ 3A	-	≤ 2,9A	-	≤ 20 mA
Absolute maximum current @ 27.5 VDC, VSWR=3:1	≤ 2A	≤ 2.5A	≤ 1.9A	≤ 2.4A	≤ 20 mA

1.7.2 General Data

For 620X units the following data apply:

Frequency range..... 118.000 MHz to 136.975 MHz (-1XX model)

118.000 MHz to 136.9916 MHz (-0XX model)

Channel spacing..... 25 kHz (-1XX model)

8.33/25 kHz (-0XX model)

Number of channels..... 760 (-1XX model)

2280 + 760 (-0XX model)

Storage Temperature range ...-55°C to +85°C
Operating Temperature range ..-20°C to +55°C AR620X-(XXX) and RCU6201-(XXX)
-40°C to +55°C RT6201-(XXX)
short-time +70°C (all versions)
Operating Altitude .....35,000 ft
Vibration .....Category S (Curve M) + Category U (Curve G)

1.7.3 Dimensions & Weight

	AR6201-(XXX)	AR6203-(XXX)	RCU6201-(XXX)	RT6201-(XXX)
Front panel	61.2mm x 61.2 mm	158.8mm x 41.2 mm	61.2 mm x 61.2 mm	61 mm x 61 mm
Depth of unit	187.8 mm (front plate to end of antenna connector)	207 mm (front plate to end of antenna connector)	39.3 mm	188 mm
Mounting	(back panel) standard 58 mm diameter (2¼ inch)	Mounting Kit MK6403-1	(back panel) standard 58 mm diameter (2¼ inch)	Mounting Kit MK6201-(010) or directly on avionic bay
Material	AlMg	AlMg/Plastic	AlMg	AlMg
Surface treatment	Control-head coated with black matt paint			
Weight	675g	850g	150g	600g

1.7.4 Receiver Data for AR620X and RT6201

Sensitivity ..... ≤ -101 dBm for a (S+N)/N ratio of 6 dB (nominal)
..... ≤ -93 dBm for a (S+N)/N ratio of 6 dB (qualified under environmental conditions)

Effective bandwidth ..... ≥ ± 2.78 kHz at the 6 dB points
(8.33 kHz channel spacing) ≤ ± 7.37 kHz at the 60 dB points

Effective bandwidth ..... ≥ ± 8 kHz at the 6 dB points
(25 kHz channel spacing) ≤ ± 22 kHz at the 60 dB points

Squelch ..... level adjustable

AGC characteristic ..... ≤ 6 dB in range -93 dBm to 0 dBm
Distortion ..... ≤ 15% at 30% 10dB below rated output power
≤ 15% at 70% and rated output power

Audio frequency response ..... ≤ 6 dB 350 Hz to 2500 Hz
(8.33 kHz channel spacing) ≥ 35 dB at 4000 Hz
Audio Noise ..... ≤ 6 dB 300 Hz to 3400 Hz
≥ 18 dB at 4000 Hz

Rated output for speaker operation.. ≥ 4 W into 4 Ohm

Rated output power for headphone 1.. ≥ 300 mW into 75 Ohm
≥ 100 mW into 600 Ohm

Rated output power for headphone 2.. ≥ 200 mW into 75 Ohm
≥ 100 mW into 600 Ohm

Audio auxiliary input..... 50 mV to 8 V (adjustable) across 600 Ohm

Offset-carrier operation ..... YES (25 / 8.33 kHz)

1.7.5 Transmitter Data AR620X and RT6201

Output power into 50 Ohm ..... ≥ 6 W for AR620X-(X2X) and RT6201-(X2X)
(with and without modulation): . ≥ 10 W for AR620X-(X1X) and RT6201-(X1X)

Frequency tolerance..... ≤ ±5 ppm

Duty cycle..... 120 sec (TX): 480 sec (RX)

Type of modulation..... A3E

Modulation capability..... ≥ 70%

Distortion..... ≤ 15%

Audio frequency response..... ≤ 6 dB, 350 Hz to 2500 Hz
(8.33 kHz channel spacing)

Audio frequency response..... ≤ 6 dB, 300 Hz to 2500 Hz
(25 kHz channel spacing)

Dynamic microphone..... 1…20 mV compressor starting point, adjustable
(with compressor) Input balanced, 200 Ω
Input range up to 20 dB above compressor starting point.

Standard microphone(s)..... 10…1000 mV compressor starting point, adjustable
(with compressor) Input unbalanced, 150Ω
Input range up to 20 dB above compressor starting point.

FM deviation with modulation.... ≤ 3 kHz

Sidetone..... Adjustable

Automatic shutdown of transmit mode 120 sec.
(Factory configurable 30 sec … 120 sec)

1.7.6 Emergency Operation

If the device enters emergency operation, the speaker is switched “OFF” due to degraded performance. Depending on settings in installation setup “LOW BATT” may be indicated if supply voltage drops below a predefined threshold to indicate to the user, that he should connect his headset as the speaker may be switched “OFF” soon).In this case, a headset is

required to continue operation of the transceiver. This data is applicable for AR620X and RCU6201.

Panel & Display Backlight ..... switched off for

TX Output Power ..... ≥ 2 W into 50 Ω (with modulation)

TX Modulation Depth ..... ≥ 50 %

RX Sensitivity ..... ≤-93 dBm for a (S+N)/N ratio of 6 dB

CAUTION: For power-supply voltages below 10.25 V the speaker output of the transceiver will automatically be switched "OFF" without further indication!

1.7.7 Software

The software for 620X and RCU6201 is as Level D in accordance with EUROCAE/RTCA document ED12B/DO-178B.

1.7.8 Complex Hardware

The 620X devices do not contain complex hardware.

1.7.9 Regulatory Compliance

Note: Unauthorized changes or modifications to the 620X VHF transceiver may void the compliance to the required regulatory agencies and authorization for continued equipment usage.

AR6201 Single Block VHF Transceiver

Part Number	Article Number	EASA Approval	TSO Approval	FCC Approval
AR6201-(012)	0631.418-910	EASA.210.1249 ETSO-2C37e Class: D, E ETSO-2C38e Class: 4, 6	TSO-C169a Class: D, E, 4, 6	B54AR6201
AR6201-(112)	0631.434-910	EASA.210.1249 ETSO-2C37e Class: D ETSO-2C38e Class: 4	TSO-C169a Class: D, 4	B54AR6201
AR6201-(022)	0636.339-910	EASA.210.1249 ETSO-2C37e ETSO-2C38e Class: D, E, 4, 6	TSO-C169a Class: D, E, 4, 6	B54AR6201
AR6201-(122)	0636.355-910	EASA.210.1249 ETSO-2C37e Class: D ETSO-2C38e Class: 4 Class: D, 4	TSO-C169a Class: D, 4	B54AR6201

RT6201 Remote VHF Transceiver

Part Number	Article Number	EASA Approval	TSO Approval	FCC Approval
RT6201-(010)	0631.442-910	EASA. pending ETSO-2C37e Class: D, E ETSO-2C38e Class: 4, 6	TSO-C169a Class: D, E, 4, 6	pending
RT6201-(020)	0636.312-910			

RCU6201 Remote Control Unit

Part Number	Article Number	EASA Approval	TSO Approval	FCC Approval
RCU6201-(012)	0631.469-910	EASA.210.1249 ETSO-2C37e Class: D, E ETSO-2C38e Class: 4, 6	TSO-C169a Class: D, E, 4, 6	B54AR6201
RCU6201-(112)	0631.485-910	EASA.210.1249 ETSO-2C37e Class: D ETSO-2C38e Class: 4	TSO-C169a Class: D, 4	B54AR6201

AR6203 Single Block VHF Transceiver

Part Number	Article Number	EASA Approval	TSO Approval	FCC Approval
AR6203-(012)	0630.993-910	EASA. Pending ETSO-2C169a Class: C, H2, 4, 6	TSO-C169a Class: D, E, 4, 6	pending
AR6203-(112)	0631.566-910	EASA. pending ETSO-2C169a Class: C, 4	TSO-C169a Class: C, 4	pending
AR6203-(022)	0636.371-910	EASA. pending ETSO-2C169a Class: C, H2, 4, 6	TSO-C169a Class: D, E, 4, 6	pending
AR6203-(122)	0636.398-910	EASA. pending ETSO-2C169a Class: C, 4	TSO-C169a Class: C, 4	pending

1.8 Environmental Qualification AR620X and RCU6201

Under environmental test condition in accordance with the procedures set forth in EUROCAE/RTCA Document ED-14F/DO-160F the following performance has been demonstrated.

Condition	Section	Cat.	Description
Temperature and Altitude	**4.0**	C4	
Ground Survival Low Temperature	4.5.1	C4	-55 deg C
Short-Time Operating Low Temperature			-20 deg C
Low Operating Temperature			-20 deg C
High Ground Survival Temperature	4.5.2		+85 deg C
High Short-Time Operating Temp.			+70 deg C
High Operating Temp.			+55 deg C
In-flight Loss of Cooling	4.5.5	-	No forced cooling required
Altitude	4.6.1	C4	35000 ft
Decompression	4.6.2		N/A
Overpressure	4.6.3		N/A
Temperature Variation	**5.0**	B	5 deg C per minute
Humidity	**6.0**	A	Standard
Shock and Crash Safety	**7.0**	B	Fixed-wing and Helicopter, standard
Vibration	**8.0**	S+U	Test curve M+G Fixed-wing + Helicopter
Explosion Proofness	**9.0**	-	N/A
Water Proofness	**10.0**	Y	-
Fluids Susceptibility	**11.0**	-	N/A
Sand and Dust	**12.0**	-	N/A
Fungus Resistance	**13.0**	-	N/A
Salt Spray	**14.0**	-	N/A
Magnetic Effect	**15.0**	Z	1 degree deflection at 0.3 m
Power Input	**16.0**	B	DC installations with battery of significant capacity
Voltage Spike	**17.0**	A	High degree of protections against voltage spikes

Condition	Section	Cat.	Description
Audio Freq. Conducted Susceptibility	**18.0**	B	DC installations with battery of significant capacity
Induced Signal Susceptibility	**19.0**	AC	Primary power DC or AC, 400Hz
Radio Frequency Susceptibility	**20.0**	RW	Interim high intensity radiated fields
Emission of Radio Frequency Energy	**21.0**	B	Equipment where interference should be controlled to a tolerable level
Lightning Induced Transients Susceptibility	**22.0**	A1E3X	Pin test waveform A, level 3 Cable bundle test waveform E, level 3
Lightning Direct Effects	**23.0**	-	N/A
Icing	**24.0**	-	N/A
Electrostatic Discharge	**25.0**	A	Equipment operated in an aerospace environment
Fire, Flammability	**26.0**	-	N/A

1.9 Environmental Qualification RT6201

Under environmental test condition in accordance with the procedures set forth in EUROCAE/RTCA Document ED-14F/DO-160F the following performance has been demonstrated.

Condition	Section	Cat.	Description
Temperature and Altitude	**4.0**	C4	
Ground Survival Low Temperature	4.5.1	C4	-55 deg C
Short-Time Operating Low Temperature			-40 deg C
Low Operating Temperature			-40 deg C
High Ground Survival Temperature	4.5.2		+85 deg C
High Short-Time Operating Temp.			+70 deg C
High Operating Temp.			+55 deg C
In-flight Loss of Cooling	4.5.5	-	No forced cooling required
Altitude	4.6.1	C4	35000 ft

Condition	Section	Cat.	Description
Decompression	4.6.2		N/A
Overpressure	4.6.3		N/A
Temperature Variation	**5.0**	B	5 deg C per minute
Humidity	**6.0**	A	Standard
Shock and Crash Safety	**7.0**	B	Fixed-wing and Helicopter, standard
Vibration	**8.0**	S+U	Test curve M+G fixed-wing + helicopter
Explosion Proofness	**9.0**	-	N/A
Water Proofness	**10.0**	Y	N/A
Fluids Susceptibility	**11.0**	-	N/A
Sand and Dust	**12.0**	-	N/A
Fungus Resistance	**13.0**	-	N/A
Salt Spray	**14.0**	-	N/A
Magnetic Effect	**15.0**	Z	1 degree deflection at 0.3 m
Power Input	**16.0**	B	DC installations with battery of significant capacity
Voltage Spike	**17.0**	A	High degree of protections against voltage spikes
Audio Freq. Conducted Susceptibility	**18.0**	B	DC installations with battery of significant capacity
Induced Signal Susceptibility	**19.0**	AC	Primary power DC or AC, 400 Hz
Radio Frequency Susceptibility	**20.0**	SW	Interim High Intensity Radiated Fields
Emission of Radio Frequency Energy	**21.0**	B	Equipment where interference should be controlled to a tolerable level
Lightning Induced Transients Susceptibility	**22.0**	A1E3X	Pin test waveform A, level 3 Cable bundle test waveform E, level 3
Lightning Direct Effects	**23.0**	-	N/A

Condition	Section	Cat.	Description
Icing	**24.0**	-	N/A
Electrostatic Discharge	**25.0**	A	Equipment operated in an aerospace environment
Fire, Flammability	**26.0**	-	N/A

1.10 Accessories

Available accessories for 620X can be purchased with the following Article Numbers. The connector kit or mounting kit as required for equipment installation is normally included in the delivery of your purchased Transceiver. The following information is needed for spare part order.

Connector Kit CK4201-S (soldering version)	**Article-No. 0879.304-954**
1 Dsub25-s	Article no. 0725.021-277
1 Connector housing	Article no. 0775.479-277
1 Antenna plug	Article no. 0725.706-277
1 Label “COMM”	Article no. 0711.111-258
Connector Kit CK4201-C (crimp version)	**Article-No. 0514.901-954**
1 Dsub25-s	Article no. 0472.921-277
1 Connector housing	Article no. 0775.479-277
1 Antenna plug	Article no. 0725.706-277
1 Label “COMM”	Article no. 0711.111-258
Connector Kit CK6200-S (soldering version)	**Article-No. 0617.903-954**
1 Dsub25-s	Article no. 0725.021-277
1 Dsub25-p	Article no. 0726.331.277
2 Connector housings	Article no. 0775.479-277
1 Antenna plug	Article no. 0725.706-277
1 Label “COMM”	Article no. 0711.111-258
Connector Kit CK6200-C (crimp version)	**Article-No. 0617.891-954**
1 Dsub25-s	Article no. 0472.921-277
1 Dsub25-p	Article no. 0891.551-277
2 Connector housings	Article no. 0775.479-277
1 Antenna plug	Article no. 0725.706-277
1 Label “COMM”	Article no. 0711.111-258

Connector Kit CK5000-S (soldering version)	**Article-No. 0511.791-954**
1 Dsub15-s	Article no. 0344.801-277
1 Connector housing	Article no. 0774.049-277
1 Label “COMM”	Article no. 0711.111-258
1 Label “NAV”	Article no. 0711.128-258
1 Label “ADF”	Article no. 0711.136-258
1 Label “XPDR”	Article no. 0711.144-258
Connector Kit CK5000-C (crimp version)	**Article-No. 0511.781-954**
1 Dsub25-s	Article no. 0774.030-277
1 Connector housing	Article no. 0774.049-277
1 Label “COMM”	Article no. 0711.111-258
1 Label “NAV”	Article no. 0711.128-258
1 Label “ADF”	Article no. 0711.136-258
1 Label “XPDR”	Article no. 0711.144-258
Mounting Kit MK6201-(010)	**Article-No. 0631.515-261**
Mounting Kit MK6403-1	**Article-No. 0598.569-284**
Adapter for AR3201 wiring 1AD042	**Article-No. 0877.522-959**

Available Documentation:

Operating Instructions AR6201, RT6201, RCU6201	Article no. 0638.420-071
Operating Instructions AR6203	Article no. 0639.680-071
Manual Installation and Operation 620X Family	Article no. 0638.404-071
Manual Maintenance and Repair 620X Family	Article no. 0638.412-071

Blank

Section 2 INSTALLATION

The installation of the VHF transceiver depends on the type of aircraft and its equipment. Therefore, only general information can be given in this section.

2.1 Limitations

The installation of the AR620X is designed for use in cockpit environment of general aviation aircrafts including helicopters. For installation the following limitations apply:

- Installations have to be in accordance with appropriate EASA or FAA approved guidelines. The personnel installing this article must ensure that the aircraft installation conditions are within the ETSO/TSO standards applicable for the specific type or class of aircraft,
- The 620X VHF Transceiver must be connected to a VHF antenna in order to satisfy FAA TSO-C169a.
- The conditions and tests for ETSO/TSO approval of this article are minimum performance standards.
- The equipment is not intended for installation in areas where fluid contamination could be commonly encountered.

Note: Changes or modifications made to this equipment not expressly approved in written form by BECKER may void the authorization to operate this equipment.

2.2 Unpacking the Equipment and Preparation for Installation

General

Visually inspect the package contents for signs of transport damage. Carefully unpack the equipment and check for completeness. Retain all packaging material in case reshipment becomes necessary.

Additional Required Equipment

The 620X VHF Transceiver is intended for use with standard aviation accessories. The following equipment is required for installation:

- VHF COM Antenna with coaxial 50 Ω impedance cable and BNC connector
- Microphone and headphone or speaker

2.3 Mechanical Installation

2.3.1 AR6201 and RCU6201 Installation

The AR6201 and RCU6201 are designed to be mounted in the aircraft instrument panel within easy view and reach of pilot/operator. The mounting location for AR6201 shall be at least 30 cm away from the aircraft magnetic compass, to avoid any interference to the magnetic compass by the transceiver. The mounting location for RCU6201 has no restrictions. For unit dimensions refer

to Figure 2-1, Figure 2-2 and Figure 2-3. Leave a clearance of minimum 5 mm between the AR6201 respectively RCU6201 and other avionics to allow air circulation. Forced cooling is usually not required. For installation via back-panel mounting four screws are already attached to the unit front. The circular cut out and the mounting holes have to be prepared in accordance with Figure 2-4.

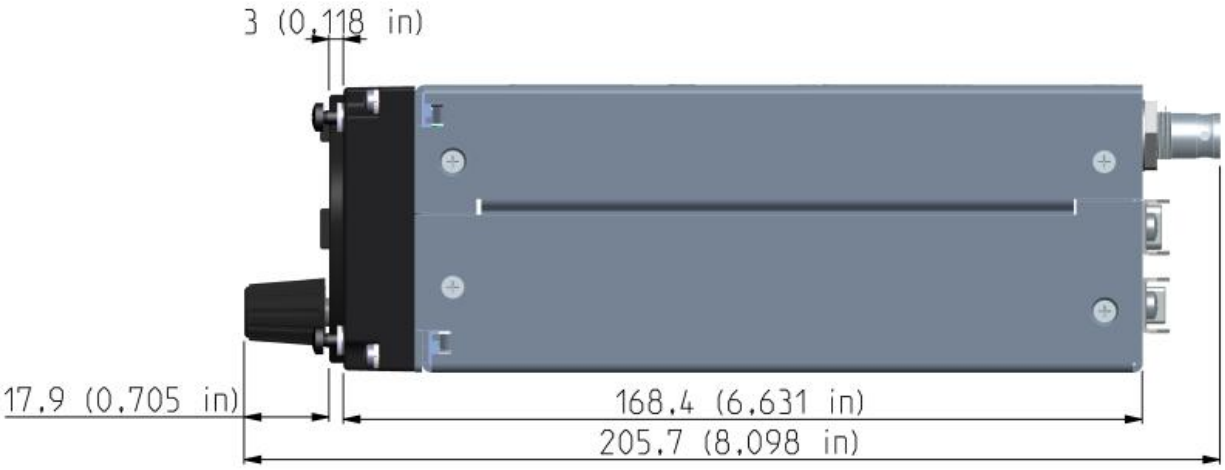

Figure 2-1: AR6201 side view, dimensions in mm and (inches)

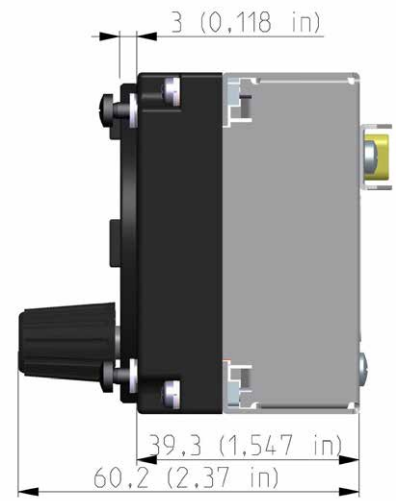

Figure 2-2: RCU6201 side view, dimensions in mm and (inches)

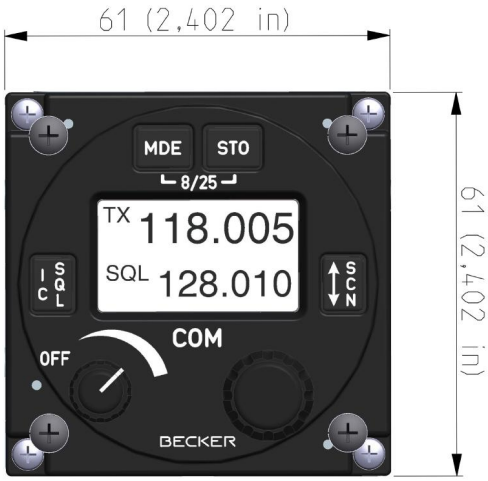

Figure 2-3: AR6201 and RCU6201 front view, dimensions in mm and (inches)

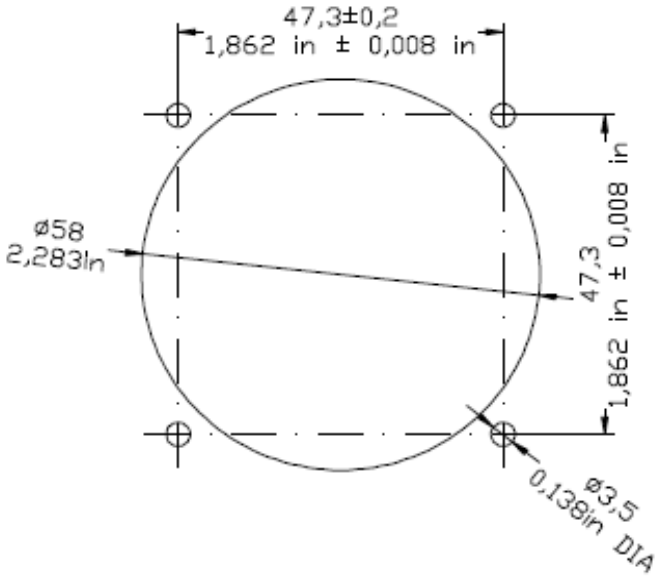

Figure 2-4: Drilling jig for back-panel mounting; dimensions in mm and (inches)

2.3.2 AR6203 Installation

The AR6203 is designed to be mounted in the aircraft instrument panel within easy view and reach of pilot/operator. The mounting location for AR6203 shall be at least 30 cm away from the aircraft magnetic compass, to avoid any interference to the magnetic compass by the transceiver. For unit dimensions refer to Figure 2-5 and Figure 2-6. Leave a clearance of minimum 5 mm between the AR6203 and other avionics to allow air circulation. Forced cooling is usually not required.

For installation of the AR6203 use the designated mounting kit MK6403-1, dimensions are shown in Figure 2-7.

First secure the mounting kit frame in the aircraft using 6 holes located on both sides of the frame, marked with “C” letter on figure. Countersunk screws are included in the delivery. Slide in the VHF transceiver into the mounting up to the stop. Use a hex-wrench to tightening the AR6203 in the final position.

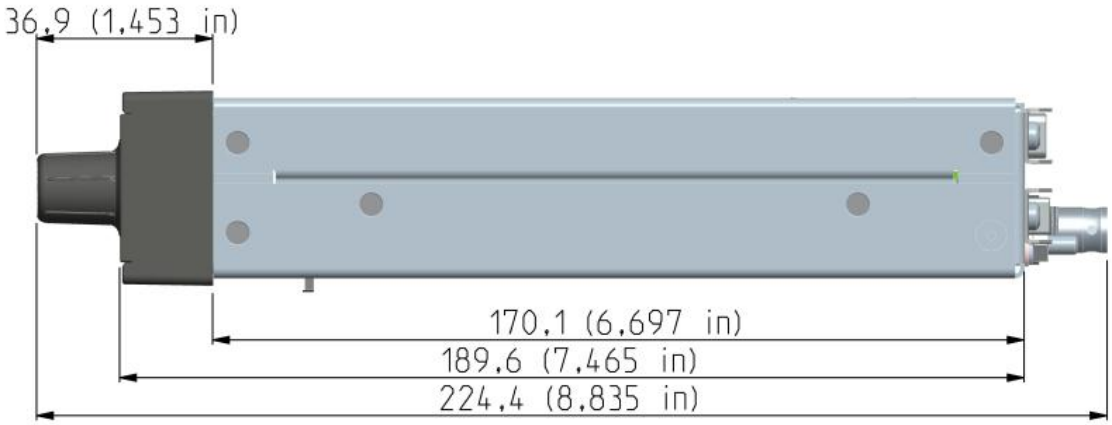

Figure 2-5: AR6203 side view, dimensions in mm and (inches)

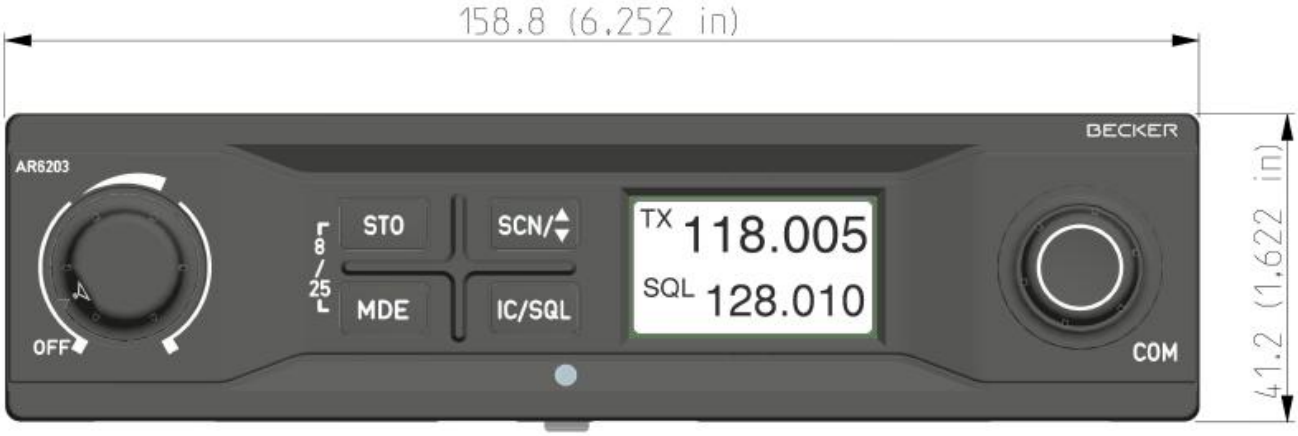

Figure 2-6: AR6203 front view, dimensions in mm and (inches)

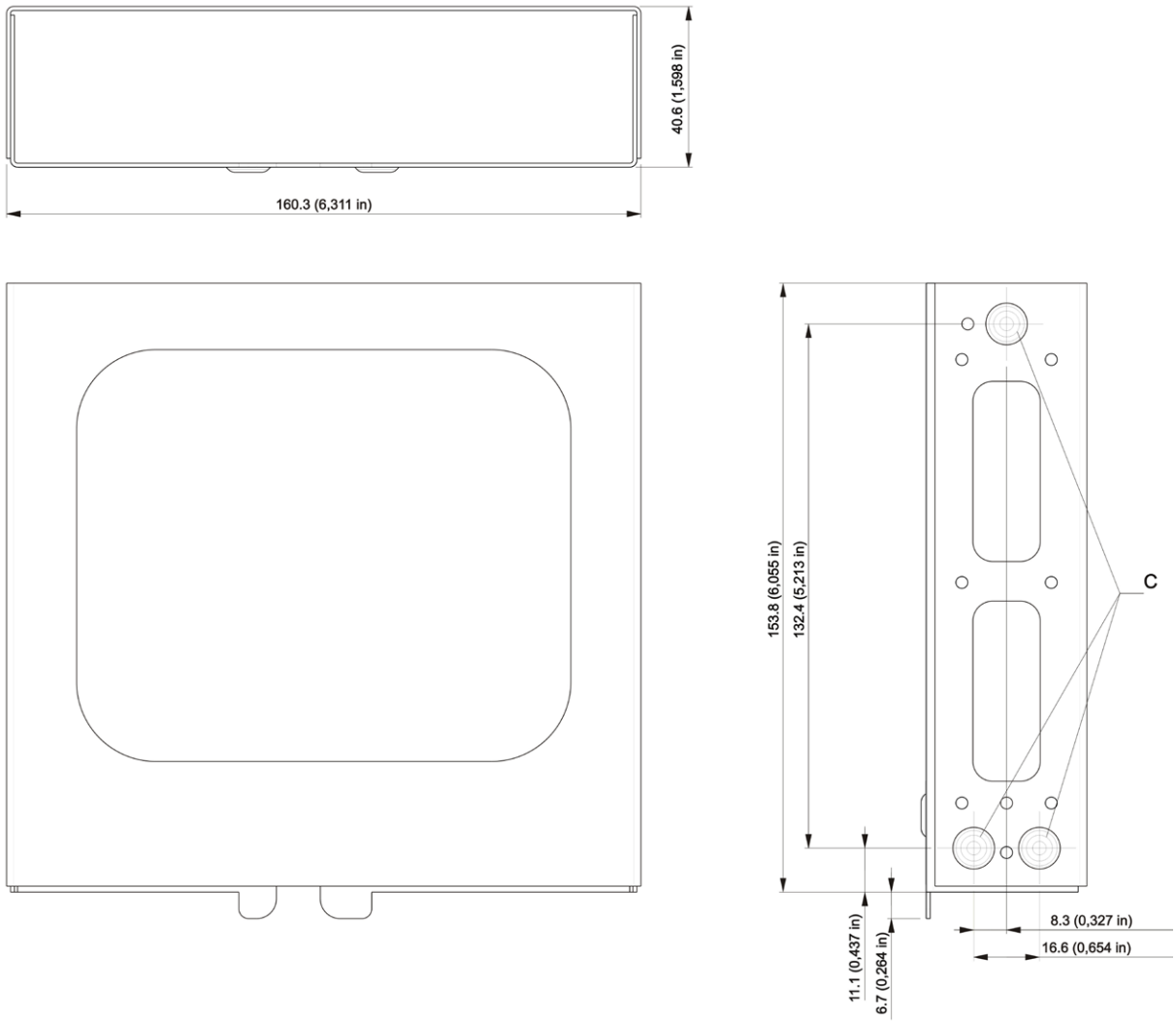

Figure 2-7: AR6203 mounting kit MK6403-1, dimensions in mm and (inches)

2.3.3 RT6201 Installation

The RT6201 can be installed at a suitable place on the aircraft (for example in avionics bay) or can be fixed using mounting kit MK6201-(010).

The mounting location for RT6201 shall be at least 30 cm away from the aircraft magnetic compass, to avoid any interference to the magnetic compass by the transceiver. For unit dimensions refer to Figure 2-8, Figure 2-9 and Figure 2-10. Leave a clearance of minimum 5 mm between the RT6201 and other avionics to allow air circulation. Forced cooling is usually not required.

Installation using RT6201 Mounting Holes

The required dimensions for installation using the mounting holes on the RT6201 are given in Figure 2-9 (dedicated holes are marked with “M” letter). Screws are included in the delivery.

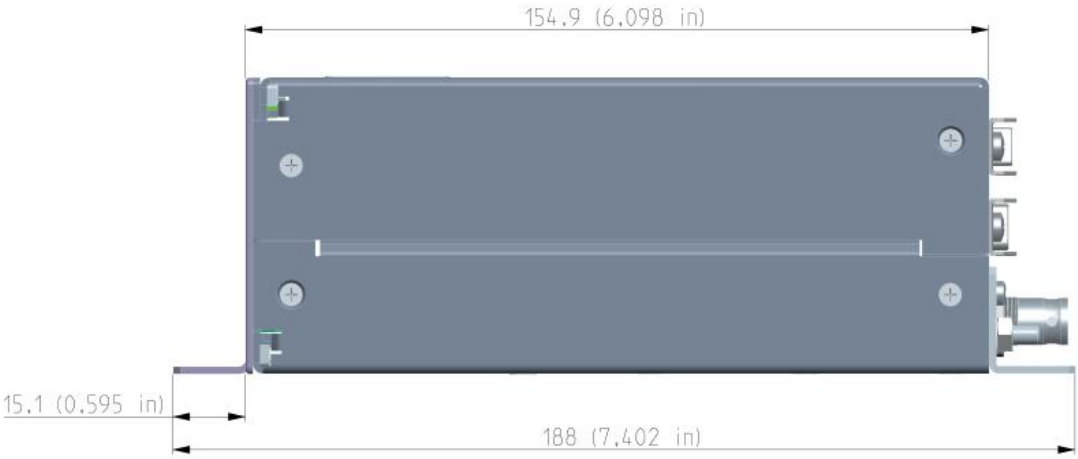

Figure 2-8: RT6201 side view, dimensions in mm and (inches)

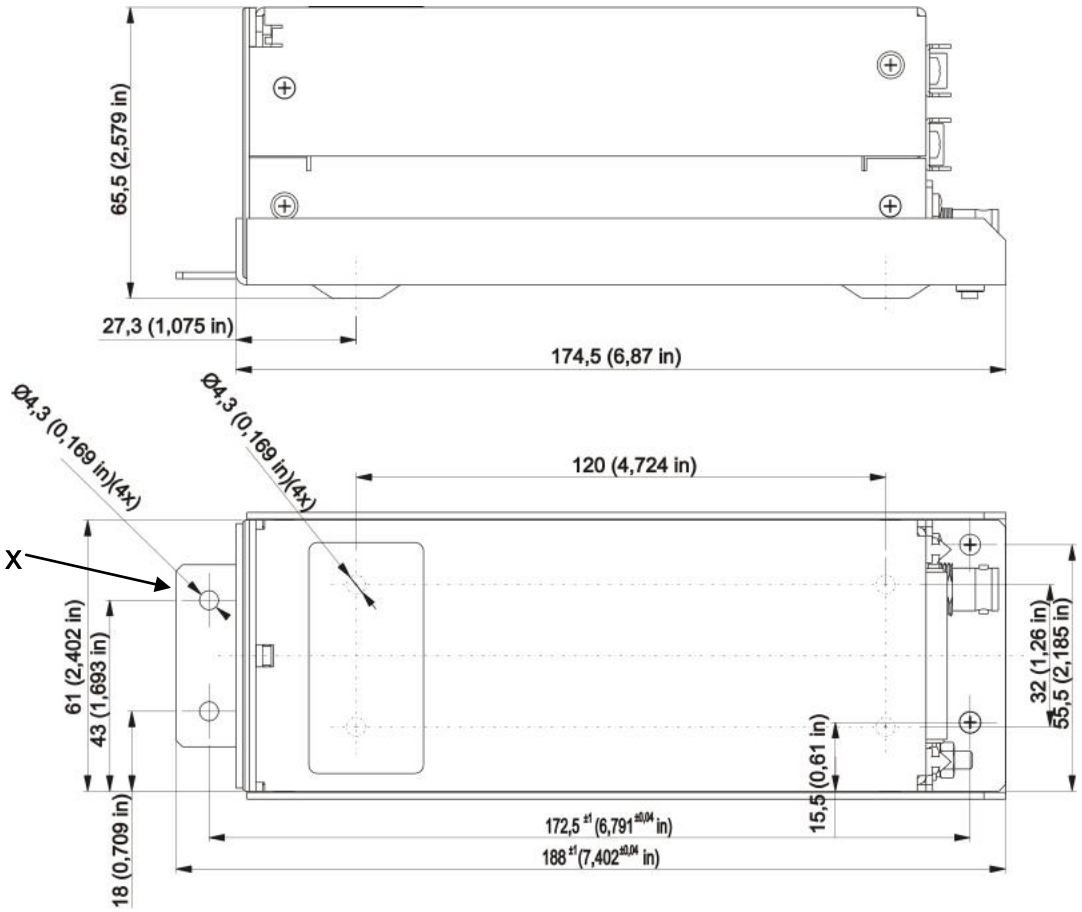

Figure 2-9: RT6201 mounting holes, dimensions in mm and (inches)

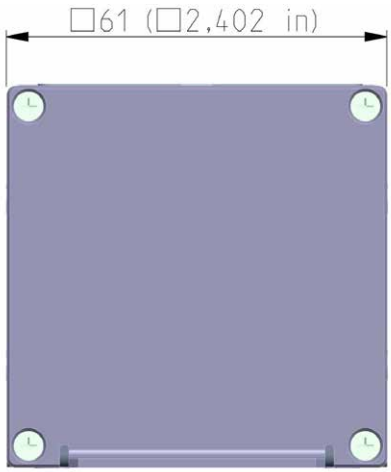

Figure 2-10: RT6201 front view, dimensions in mm and (inches)

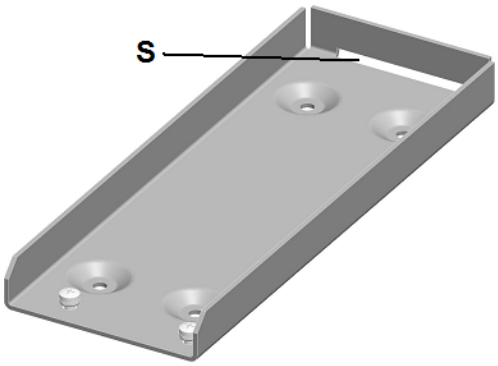

Figure 2-11: MK6201-(010) mounting slot

Installation using Mounting Kit MK6201-(010)

The necessary dimensions for installation using the mounting kit MK6201-(010) are given in Figure 2-12 (dedicated holes marked with “B” letter).

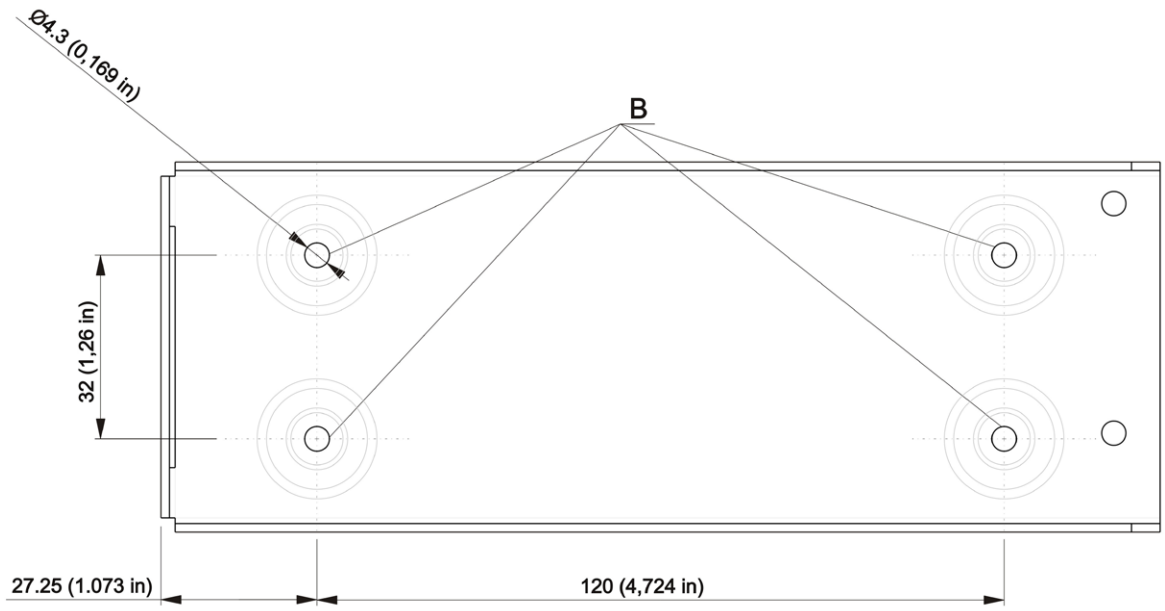

Figure 2-12: MK6201-(010) mounting slot fixing holes, dimensions in mm and (inches)

First secure the mounting kit frame in the aircraft, and then slide flat part **X** Figure 2-9 of the RT6201 into the mounting slot **S** (Figure 2-11). Use two M3 screws to tighten the unit to the mounting slot (details A on Figure 2-13). Suitable means are for example M3x6 DIN7985, associated flat washer 3.2 DIN433 and spring washer 3.1 DIN127B.

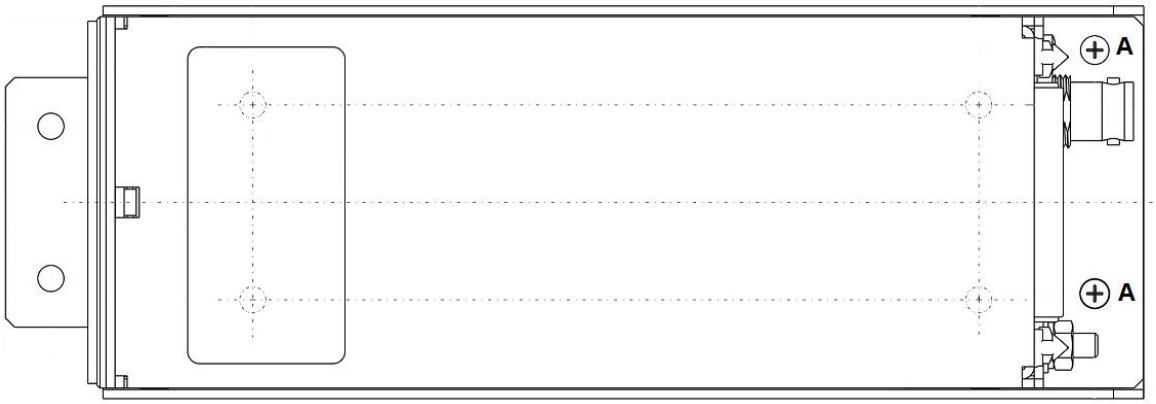

Figure 2-13: RT6201 top view, fixed on mounting slot.

2.4 Electrical Interface

2.4.1 Connectors and Pin Assignment for AR6201, AR6203 and RT6201

Antenna Connector (Position 1)

The antenna connector (Figure 2-14, position 1) is a BNC type. The antenna port is designed for operating with a nominal impedance of 50 Ohm.

Grounding Bolt (Position 2)

The transceiver has a M4 threaded grounding bolt (Figure 2-14,position 2) allowing a low impedance grounding of the unit, which is essential to avoid damage or malfunction in the case of indirect lightning, EMI and HIRF conditions.

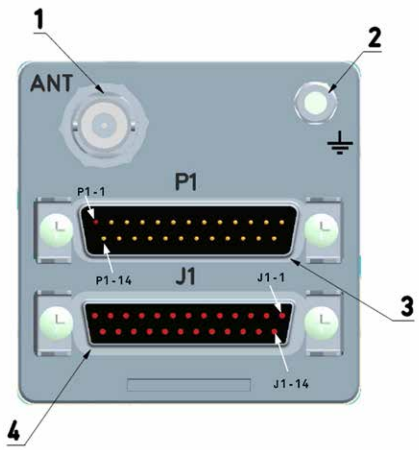

Figure 2-14: Male P1 and female J1 connectors on back plate AR6201 and RT6201

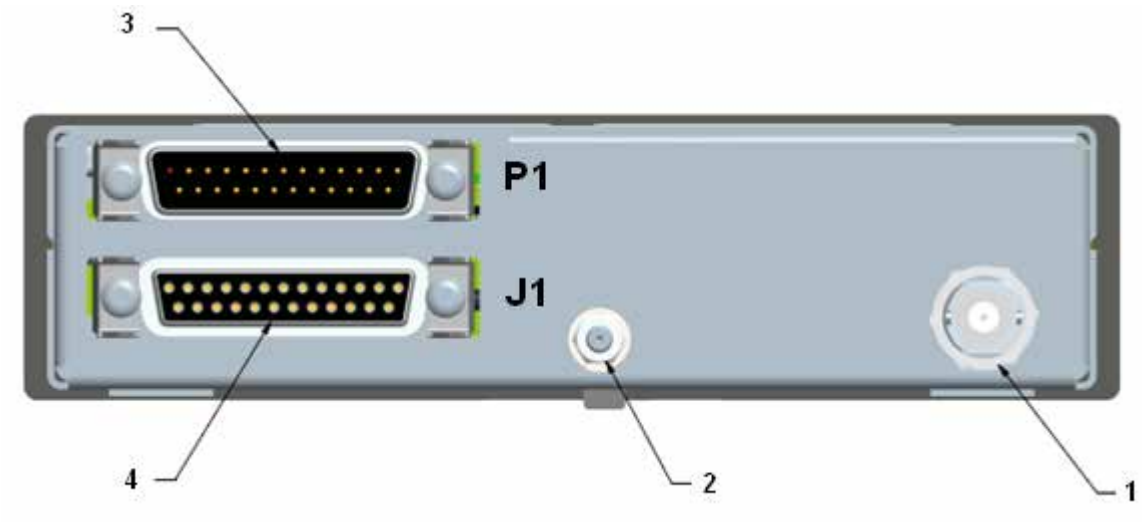

Figure 2-15: Male P1 and female J1 connectors on back plate AR6203

P1 Connector (System Interfaces) for AR6201, AR6203 and RT6201

The P1 connector (Figure 2-14 and Figure 2-15, Position 3) is a DSUB male connector with 25 pins and slide-in fastener.

Pin No.	Pin Name	Direction	Function
P1-1	SPK_HI	OUT	Speaker output signal (hot)
P1-2	HDPH1_A	OUT	Balanced output for headphone(s)1
P1-3	HDPH1_B	OUT	Balanced output for headphone(s)1
P1-4	AF_AUX_IN_HI	IN	Auxiliary audio input (hot)
P1-5	MIKE_DYN_HI	IN	Balanced input for dynamic microphone(s)
P1-6	MIKE_DYN_LO	IN	Balanced input for dynamic microphone(s)
P1-7	/IC	IN	Intercom key input; ACTIVE state - closed contact to GND
P1-8	MIKE_STD_LO	-	Standard microphone(s) low (ground/return) used for STD1, STD2 and STD3
P1-9	MIKE_STD2_HI	IN	Standard microphone 2 High (hot)
P1-10	ILL_LO	IN	Illumination low input
P1-11	P_SUPP	IN	Power supply Hot (positive)
P1-12	P_SUPP	IN	Power supply Hot (positive)
P1-13	P_SUPP_GND	-	Power supply ground (return)
P1-14	SPK_LO	-	Speaker ground (return)
P1-15	LINE_OUT	OUT	Linear audio output, unbalanced
P1-16	AGC_OUT	OUT	Receiver AGC output
P1-17	/PTT1	IN	Press To Talk key input1 ACTIVE state - closed contact to GND
P1-18	MIKE_STD1_HI	IN	Standard Microphone 1 High (hot)
P1-19	MIKE_STD3_HI	IN	Standard Microphone 3 High (hot)
P1-20	HDPH2_A	OUT	Balanced Output for headphone(s)2
P1-21	AF_AUX_IN_LO	IN	Auxiliary audio input low (ground/return)
P1-22	HDPH2_B	OUT	Balanced output for headphone(s)2
P1-23	ILL_HI	IN	Illumination high
P1-24	/PWR_EVAL	OUT	Power on monitor output
P1-25	P_SUPP_GND	-	Power supply ground (return)

J1 Connector (Serial Interfaces and Discrete I/O's)

The J1 connector is a D_SUB female connector with 25 sockets and slide-in fastener.

Pin No.	Pin Name	Direction	Function
J1-1	CPIN	-	Reserved coding pin
J1-2	TX2+	OUT	Auxiliary control interface
J1-3	RX2+	IN	Auxiliary Control Interface
J1-4	/SQL_EVAL	OUT	Squelch monitor output ACTIVE state - closed contact to GND
J1-5	/PTT2	IN	Press-To-Talk key input 2 ACTIVE state - closed contact to GND
J1-6	SHIELD_1	-	Secondary control & service interface SHIELD
J1-7	TX1+	OUT	Secondary control & service interface
J1-8	RX1+	IN	Secondary control & service interface
J1-9	TX2-	OUT	Auxiliary control interface
J1-10	RX2-	IN	Auxiliary control interface
J1-11	SHIELD_2	-	Auxiliary control interface SHIELD
J1-12	/EXT_SO	IN	External "Exchange" key Falling edge will activate frequency exchange
J1-13	/SRV_EN	IN	Service enable pin ACTIVE state - closed contact to GND
J1-14	TX1-	OUT	Secondary control & service interface
J1-15	RX1-	IN	Secondary control & service interface
J1-16	NC		not connected
J1-17	/SQL_SW	IN	"Squelch Force-OFF" input ACTIVE state - closed contact to GND
J1-18	NC		not connected
J1-19	NC		not connected
J1-20	/ISOL	IN	"ISOL" input ACTIVE state - closed contact to GND
J1-21	D_GND	-	Discrete lines ground
J1-22	D_GND	-	Discrete lines ground
J1-23	D_GND	-	Discrete lines ground
J1-24	/MIKE_SW	IN	Configuration selector CFG1 and CFG2
J1-25	/EXT_ON	IN	External Power ON input ACTIVE state - closed contact to GND

2.4.2 Inputs / Outputs Detailed Description

Microphone Connection – Standard Microphones

Pin No.	Pin Name	Direction	Function
P1-8	MIKE_STD_LO	-	Standard microphone(s) low (ground/return) used for STD1, STD2 and STD3
P1-9	MIKE_STD2_HI	IN	Standard microphone 2 high (hot)
P1-18	MIKE_STD1_HI	IN	Standard microphone 1 high (hot)
P1-19	MIKE_STD3_HI	IN	Standard microphone 3 high (hot)

The transceiver has three unbalanced inputs STD1, STD2 and STD3. Each input has an input impedance of 110 Ohm and a nominal sensitivity of 110 mV.

This sensitivity level can be adjusted in the installation setup from 9 mV to 1500 mV independently for each of the microphones. The power supply delivered from pins P1-9, P1-18 and P1-19 for supply of the connected microphone(s) is > 8 V DC (8.3 V nominal) open circuit with an output impedance of 120 Ohm.

Note:

1. **Sensitivity range 25 mV to 1000 mV was qualified under environmental conditions.**
2. **For common aviation microphones the power supply is able to support two microphones in parallel. It is recommended to combine only microphones of the same type / impedance.**
3. **For installations with high interferences it is recommended to use sensitivity level 27 mV to 1500 mV.**
4. **It is highly recommended to mount the jacks isolated from aircraft frame in order to avoid ground loops.**

Microphone Connection - Dynamic Microphone

Pin No.	Pin Name	Direction	Function
P1-5	MIKE_DYN_HI	IN	Balanced input for dynamic microphone(s)
P1-6	MIKE_DYN_LO	IN	Balanced input for dynamic microphone(s)

For interfacing with dynamic microphone(s) the transceiver has a balanced input with an impedance of 140 Ohm and a nominal sensitivity of 1.6 mV. This sensitivity level can is adjustable in the installation setup from 1 mV to 20 mV. Two dynamic microphones in parallel may be connected (identical technical characteristics of the microphones are preferable).

Note:

1. **The sensitivity range of 1 mV to 20 mV was qualified under environmental conditions. For installations with high interferences it is recommended to use sensitivity level 2 mV to 20 mV.**
2. **Note: It is highly recommended to mount the jacks isolated from aircraft frame in order to avoid ground loops.**

Speaker Connection

Pin No.	Pin Name	Direction	Function
P1-1	SPK_HI	OUT	Speaker output signal
P1-14	SPK_LO	-	Speaker ground (return)

The speaker output provides nominal 4 W into 4 Ohm.

CAUTION: The magnetic field of a speaker influences the magnetic compass. When choosing the mounting point, a safe distance between the compass and the speaker must be determined. After speaker installation, the accuracy of compass operation must be verified.

Headphone(s) Connection

Pin No.	Pin Name	Direction	Function
P1-2	HDPH1_A	OUT	Balanced output for headphone(s) 1
P1-3	HDPH1_B	OUT	Balanced output for headphone(s) 1
P1-20	HDPH2_A	OUT	Balanced output for headphone(s) 2
P1-22	HDPH2_B	OUT	Balanced output for headphone(s) 2

The headphone 1 output is a balanced, transformer-coupled output providing nominal 300 mW into 75 Ohm. For the use of a single shielded wire for headphone a unbalanced output configuration is recommended. To achieve this P1-3 can be grounded (connection to pin P1-13/P1-25).

The headphone 2 output is balanced output providing nominal 200 mW into 75 Ohm.

Up to two headphones with self-impedance of 300 Ohm (or higher) may be connected in parallel on each circuit, therefore up to four headphones can be connected at the same time.

Note: It is highly recommended to mount the jacks isolated from aircraft frame in order to avoid ground loops.

CAUTION: The headphone 2 output shall be always floating (cannot be connected in unbalance configuration as headphone 1).

Panel Illumination

Pin No.	Pin Name	Direction	Function
P1-10	ILL_LO	IN	Illumination low input
P1-23	ILL_HI	IN	Illumination high input

The VHF transceiver provides illumination for push-buttons and LCD display. In the installation setup it can be configured if this illumination is controlled via front panel or externally via pins P1-10 and P1-23

Connect ILL_LO (pin P1-10) to aircraft ground. Connect ILL_HI (pin P1-23) to dimming bus.

“Auxiliary” Audio Input

Pin No.	Pin Name	Direction	Function
P1-4	AF_AUX_IN_HI	IN	Auxiliary audio input hot
P1-21	AF_AUX_IN_LO	-	Auxiliary audio input low ground/return

The AF auxiliary input enables to connect an external audio source (NAV, music-player, …) to the transceiver. The external audio is audible only when transceiver is in receiving mode.
The sensitivity can be adjusted in the installation setup from 50 mV to 8 V. The input impedance of this input is 600 Ohm.

“LINE_OUT” Audio Output

Pin No.	Pin Name	Direction	Function
P1-14	SPK_LO	-	Speaker ground (return)
P1-15	LINE_OUT_HI	OUT	Linear audio output, unbalanced

The LINE OUT enables to connect e.g. an external voice recorder to the transceiver in ground-based installations. The LINE OUT output provides nominal 1 VRMS into 1000 Ohm.

External Power ON

Pin No.	Pin Name	Direction	Function
J1-25	/EXT_ON	IN	External Power ON input ACTIVE state - closed contact to GND

External Power ON input provides possibility to power on system by connecting this pin to the ground. Can be connected in installation where avionics central power switch is used.

Push-To-Talk (/PTT)

Pin No.	Pin Name	Direction	Function
P1-17	/PTT1	IN	Push-To-Talk key input 1 ACTIVE state - closed contact to GND
J1-5	/PTT2	IN	Push-To-Talk key input 2 ACTIVE state - closed contact to GND

There are two Push-to-Talk inputs /PTT1 and /PTT2.
Each input has an internal pull up. If input is connected to ground a current of less than 1 mA will flow. The transceiver enters transmit operation, if one or both inputs are connected to ground.
According to microphone(s) configuration, signal from particular inputs can or cannot modulate transmissions.

External Intercom Key (IC)

Pin No.	Pin Name	Direction	Function
P1-7	IC	IN	Intercom key input; ACTIVE state - closed contact to GND

With pin 7 connected to ground the transceiver provides intercom operation. This input has an internal pull up and is LO active at max.1 mA. For installations where automatic intercom operation is activated via VOX connection of this pin 7 is not necessary. If input is connected to ground a current of 1 mA will flow.
This discrete input activates the intercom:

- When the VOX does not work satisfactorily because of very loud cockpit environment and too high ambient noise
- When the speaker is enabled in current audio in/out configuration (installation setup)

Isolation Mode (/ISOL)

Pin No.	Pin Name	Direction	Function
J1-20	/ISOL	IN	ISOL input for separation from co-pilot (passenger) ACTIVE state - closed contact to GND

620X transceiver provides two microphone paths. Two microphones can be physically connected to each microphone path. Depending on the configuration it is possible to connect pilot and copilot on one path and two passengers on second path.

When /ISOL is active (isolation mode) passengers are isolated from pilots intercom and from radio transmission, but still can freely communicate with each other.

When /ISOL is inactive both the pilots and the passengers can hear all communications.

Power Indication (/PWR_EVAL)

Pin No.	Pin Name	Direction	Function
P1-24	/PWR_EVAL	OUT	Power on Monitor output: AR6201 “OFF” - open circuit AR6201 on - closed circuit to GND (max. 100 mA)

This output indicates if the transceiver is switched on or switched off. It is an open collector output type. The output is internally connected to ground when the unit is switched on. In this case a current of maximum 100 mA can flow into the transceiver to drive for example an external relay. The output has high impedance when the unit is switched off.

Note: In order to avoid damage of this output a protection diode in parallel to the external relay shall connected.

VHF Channel Signal Indication (/SQL_EVAL)

Pin No.	Pin Name	Direction	Function
J1-4	/SQL_EVAL	OUT	Indicates presence of the VHF channel’s signal on the audio outputs.

This output indicates presence of the VHF channel’s signal on the audio outputs. It is an open collector output type. The output is internally connected to ground when the unit receives signal on the selected VHF channel and this audio signal is available on audio outputs. In this case a current of maximum 100 mA can flow into the transceiver to drive an external relay for example. The output has high impedance when the unit is switched off.

External Mike Switch (/MIKE_SW)

Pin No.	Pin Name	Direction	Function
J1-24	/MIKE_SW	IN	Configuration selector CFG1 and CFG2. ACTIVE state - closed contact to GND

The external Mike switch provides selection between the two available audio in/out configurations: CFG1 and CFG2. Configurations can also be switched during flight in installation setup.

- When /MIKE_SW is active then configuration CFG1 is used.
- When /MIKE_SW is inactive then CFG2 is used.

Each configuration CFG1 and CFG2 stores several parameters, that can be set in installation setup pages. (For details refer to chapter 2.7).

2.4.3 Connector and Pin Assignment for RCU6201

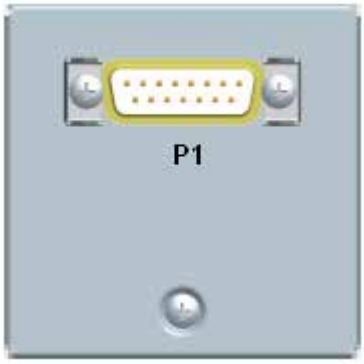

Figure 2-16: Connector on back plate of RCU6201

P1 Connector (System Interface) for RCU6201

The P1 connector (Figure 2-16) is a DSUB male connector with 15 pins and slide-in fastener.

Pin No.	Pin Name	Direction	Function
P1-1	TX0_422+	OUT	Primary Control & Service Interface
P1-2	TX0_422-	OUT	Primary Control & Service Interface
P1-3	RX1_422+	IN	Auxiliary Control Interface
P1-4	RX0_422+	IN	Primary Control & Service Interface
P1-5	RX0_422-	IN	Primary Control & Service Interface
P1-6	ILL_LO	IN	Illumination low input
P1-7	TX1_422-	OUT	Auxiliary Control Interface
P1-8	ILL_HI	IN	Illumination high
P1-9	GND	-	Power supply Ground (return), shielding for RS422, Ground for discrete lines
P1-10	RX1_422-	IN	Auxiliary Control Interface
P1-11	SUPP_IN	-	Power supply Hot (positive)
P1-12	/SRV_EN	OUT	Service enable pin ACTIVE state - closed contact to GND
P1-13	/EXT_ON	IN	External Power ON input ACTIVE state - closed contact to GND
P1-14	TX1_422+	OUT	Auxiliary Control Interface
P1-15	/EXCH_CH	IN	External “Exchange” key ACTIVE state - closed contact to GND

Panel Illumination

Pin No.	Pin Name	Direction	Function
P1-6	ILL_LO	IN	Illumination low input
P1-8	ILL_HI	IN	Illumination high input

The RCU6201 controller push-buttons and LCD display can be illuminated. The illumination can be configured in the installation setup via front panel or externally via pin P1-6/P1-8 For external configuration connect pin P1-6 to system ground and pin P1-8 to dimming voltage bus.

External Power ON (/EXT_ON)

Pin No.	Pin Name	Direction	Function
P1-13	/EXT_ON	IN/OUT	External Power ON input/output ACTIVE state - closed contact to GND

The External Power “ON” input provides the possibility to power on the system by ensuring this pin is earthed. This can be connected in installations with a central avionics power switch or to power on RT6201.

External Exchange (/EXCH_CH)

Pin No.	Pin Name	Direction	Function
P1-15	/EXCH_CH	IN	External “Exchange” key ACTIVE state - closed contact to GND

The External “Exchange” input provides possibility to change active and preset frequency or activate SCAN mode by means of momentary switch.

2.5 Installation and Configuration of 620X Transceivers

Connection to the following equipment is required as minimum for 620X VHF transceivers:

- Power supply
- Antenna
- Microphone (direct or via external audio panel)
- Headphone or speaker (direct or via external audio panel)
- Push-To-Talk (PTT) switch

Note:

1. **Use only cables which are qualified for aircraft use (self-extinguishing).**
2. **Use AWG 20 for power supply and AWG 22/24 for other cables.**
3. **Fit sleeves over the solder joints on the equipment connector. Crimp connectors are also available from BECKER.**
4. **Protect the power supply with a 7.5 A fuse.**

The VHF transceiver is protected internally by a 5 A resettable fuse.

- Type-specific cable harnesses are also available for the aircraft wiring (contact BECKER for detailed information).
- No RF antenna cables or HF cables should be included in the cable harnesses of the system. Avoid routing of the cable loom along with other wiring, which carry audio power or pulses.
- Check the wiring carefully before powering up the unit and check particularly that power supply lines have not been reversed.

Installation of 620X transceivers requires correct wiring and configuration. All necessary information for common installations including wiring diagrams and recommended installation setup configurations are provided in 2.9.

Aircraft Type	Chapter Reference
Single seat glider	2.9.1
Twin seat motor glider	2.9.2
General aviation (GA) aircraft using standard microphones	2.9.3
Individual dual headset configuration (two IC circuits)	2.9.4
Twin seat with AR6201 tandem configuration	2.9.5
Aircraft with four seats (no TANDEM)	2.9.6
Installation with RT6201	2.9.7
Aircraft with intercom	2.9.8
Twin seat with RT6201 tandem configuration	2.9.9

2.6 Antenna Installation

The transceiver requires a standard 50 Ohm vertically polarized VHF antenna. Follow the antenna manufacturer's installation instructions. In addition consider the following recommendations:

- The COM antenna shall be on an electrical conductive surface or, on a ground plane with sufficient area of approximately 60 x 60 cm installed. (VSWR ≤ 3:1)
- The COM antenna should be separated from any installed GPS antennas by at least 50cm and as far as possible separated from any ELT antenna installed.

Note: Some ELTs have exhibited re-radiation problems generating harmonics that may cause interference with other receivers like GPS. This can happen when the transceiver or other COMM devices are transmitting on certain frequencies such as 121.5 MHz or 121.175 MHz, which may cause the ELT output circuit to auto-oscillate.

2.7 Installation Setup for RT/AR6201-(X1X)

The installation setup enables the avionics technician to set up the equipment configuration on ground. In-flight changes are not recommended.
In most cases installation setup is started on primary controller to access controller and transceiver parameters. If installed the second controller RCU6201 should be switched off. Installation setup on RCU6201 gives access to parameters of second controller. RCU6201 installation setup shall be used only if different settings for “BRIGHTENSS” or “ILLUMINATION CURVE” are required.

Note:

1. **For single block AR620X, primary controller is this one directly connected to VHF transceiver, for remote RT6201 VHF transceiver primary controller is this one connected to primary control interface.**
2. **After power on the second controller (RCU6201) parameters are synchronized with those stored in primary controller. Any RCU6201 stored parameters will be overwritten!**

2.7.1 Entering Installation Setup

Hold down the “MDE” key during power up to access the installation setup menu. The “PASSWORD DIALOG” screen will appear.

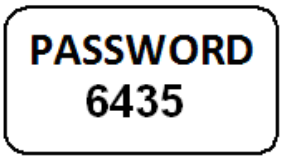

Figure 2-17: “PASSWORD DIALOG”

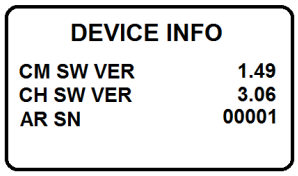

Figure 2-18: “DECIVE INFO”

Insert the 4-digit numerical code password “6435” by turning and pushing the “ROTARY ENCODER”. Confirm by pressing the ”STO” key. Now the first page of installation setup shows the “DEVICE INFO” screen.

2.7.2 Leaving Installation Setup

The installation setup can be left just by switching off the AR620X or RCU6201. All changes done up to that time are stored automatically.

2.7.3 Page Up / Page Down in the Installation Setup

The installation setup consists of several pages. Navigation within main pages:
Page Down (next page): pressing “↕/SCN” or the “ROTARY ENCODER”.
Page Up (previous page): pressing “IC/SQL” key.
Within the sub-pages of the installation setup use the “ROTARY ENCODER” for navigation.

2.7.4 Storage of Setup Data

The setting of any parameter is stored immediately after changing the parameter.

2.7.5 Terminate Installation Setup

Switch “OFF” the AR620X or RCU6201 to terminate the setup. All changes made up to this time will be stored automatically. No special action is required before leaving setup page.

2.7.6 VU Meter

The VU Meter allows correct adjustment of audio input sensitivity.

Display Contents	Description
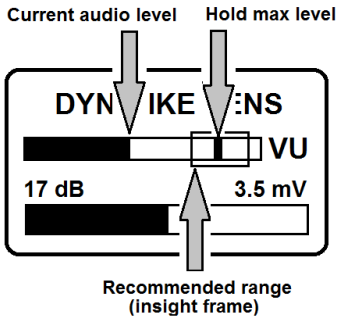	VU Meter is displayed on all sensitivity setting menus, it is located in the middle below the menu name and above the dedicated sensitivity setting bar It displays the current audio level value on selected audio input (“Current audio level”) and holds the highest value of active audio level recorded during last 3 seconds (displayed as “Hold max level” bar). Correct sensitivity is achieved if most of the time, while you are speaking normally into the microphone, the “Hold max level” bar remains in the “Recommended range”.

2.7.7 Installation Setup Pages - Data Description

Display Contents	Description
AR620X “DEVICE INFO”: 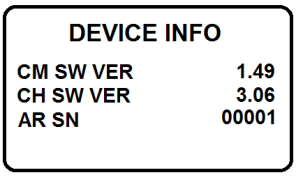 RCU6201 as primary controller of RT6201 “DEVICE INFO”: 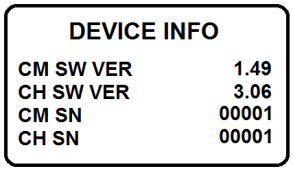 RCU6201 as secondary controller “DEVICE INFO”: 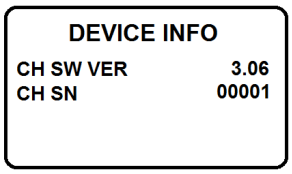	After entering the “Installation Setup” the first page “DEVICE INFO” is displayed. This page shows information about the SW version and the serial number of the transceiver. For AR620X “DEVICE INFO” displays information about; · Transceiver SW version (CM SW VER) · Controller SW version (CH SW VER), · AR620X serial number (AR SN). For RCU6201 connected as primary controller of an RT6201, this page displays information about; · Controller SW versions (CH SW VER) · Transceiver SW version, · RCU6201 serial number (CH SN) · RT6201 serial number (CM SN). For RCU6201 connected as secondary controller this page displays information about; · Controller SW version (CH SW VER) · RCU6201 serial number (CH SN).

Display Contents	Description
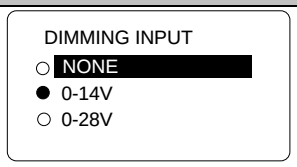	One of three options can be selected by turning the “ROTARY ENCODER” to dim display illumination and push-button background lighting. Finalize the selection by pressing “STO” push-button. **NONE:** The illumination for LCD and push-buttons is controlled via the “ROTARY ENCODER” on the transceiver itself. The pilot can adjust the brightness in the pilots menu. **0…14V or 0…28V:** The background lighting for LCD and push-buttons is controlled (via pin P1-10/P1-23) by the dimming bus of the aircraft. The dimming curve is adjustable within the range from 0 … 14 V DC respectively 0 … 28 V DC. Adjusting the brightness via the “ROTARY ENCODER” is no longer possible after selecting this option. **Note: Menu available on primary and secondary controller**
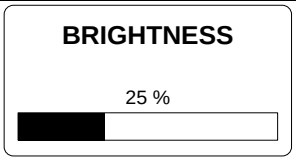	The brightness of the LCD and push-button illumination can be adjusted between 0% (off) and 100%. Select your brightness by turning “ROTARY ENCODER”. The BRIGHTNESS settings can also be adjusted in the pilot setup menu. Pilots can change the parameter at any time. BRIGHTNESS settings are separate for each controller therefore this menu is available on both controllers. **Note: This page is displayed only if dimming input is set to “NONE”. Otherwise the aircraft dimming bus will control the brightness**
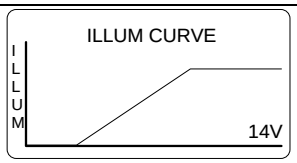 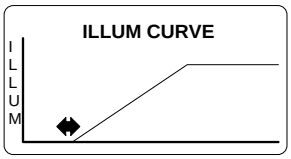	The page “ILLUM CURVE” is displayed only if the DIMMING input is either selected for “14V or 28V” dim-bus voltage. The illumination curve shows the relation between dimming bus voltage and brightness of the LCD and push-button illumination. Two adjustable points V1 and V2 define the illumination curve. Select the respective parameter by pushing the “STO” button and then adjust the value in horizontal (left/right) respectively vertical up/down)

Display Contents	Description
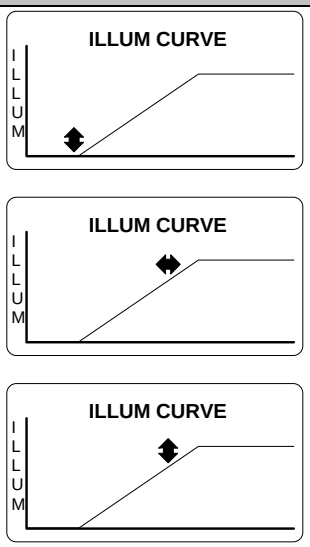	direction using the “ROTARY ENCODER”. (1) This parameter defines the horizontal parameter $V1_X$ (minimum values: 1.5V for 14V dimming bus and 4V for 28V dimming bus). Up to this value the brightness is zero. When reaching $V1_x$ the brightness is immediately adjusted to $V1_y$. (2) This parameter defines the vertical parameter $V1_Y$ which is the level of brightness that is set when trigger point $V1_x$ is reached. (3) This parameter defines the horizontal parameter $V2_X$ (maximum values: 14 or 28 V depending on selected dimming input) where the illumination curve reaches the maximum brightness level. (4) This parameter defines the vertical parameter $V2_Y$ which is the maximum brightness. **Note: Menu available on primary and secondary controller**
MEMORY OPTIONS ☑ CHANNEL STORE ☑ STORE LAST CHANNEL	Two options can be selected on “MEMORY OPTIONS” page. By means of the “ROTARY ENCODER” one option can be highlighted and enabled/ disabled by pushing the “STO” button. **CHANNEL STORE:** If this option is enabled frequencies can be stored in any of the 99 available channels. Even if the “CHANNEL STORE” option is disabled the user has access to previously stored “User Channels” **STORE LAST CHANNEL** If this option is enabled, the device automatically stores the last used VHF frequency in “Last Channel” database and user has a read access to this database. If this option is disabled the stored data in the “LAST CHANNEL” database is not accessible. **Note: Menu available on primary and secondary controller**

Display Contents	Description
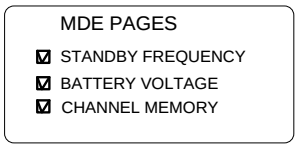	On “MDE PAGES” page three options are selectable by means of the “ROTARY ENCODER”. The three frequency selection modes provide different user interfaces for operating frequency selection. Enabling/Disabling can be toggled by pushing the “STO” button. **STANDBY FREQUENCY** enables/disables “Standard Mode” **BATTERY VOLTAGE** enables/disables “Direct Tune Mode”. **CHANNEL MEMORY** enables/disables “Channel Mode”. After deselecting “BATTERY VOLTAGE” the “DIRECT TUNE MODE” page is no longer available in the normal operation. Storing a frequency in a specific channel will be possible even if only “BATTERY VOLTAGE” or “STANDBY FREQUENCY” remain selected. At least one page will remain active, deselecting all options from the “MDE PAGES” is not possible **Note: Menu available on AR620X and RCU6201**
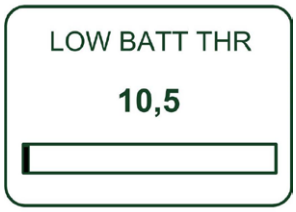	On “LOW BATT THR” page the threshold for indication of the “LOW BATT” warning page can be adjusted (default setting is 10.5 V). The low battery threshold depends on battery type in use and should be adjusted within 10V…33V by the installer turning the “ROTARY ENCODER”. “LOW BATT” warning page is displayed if the supply voltage drops below the “LOW BATT THR” value. Recommended vales: “LOW BATT THR” = 11V for 12V battery “LOW BATT THR” = 24V for 24V battery **Note: Menu available on primary and secondary controller**
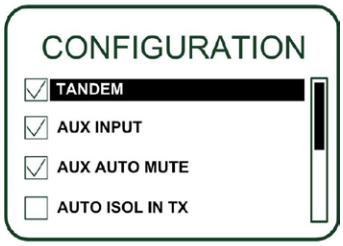 Options 1 to 4	On “CONFIGURATION” page 6 or 7 options can be selected. (refer to the note under **AUX AUTO MUTE** in the column on the right side) Use the “ROTARY ENCODER” to scroll up and down, then and push the “STO” button for selection. **TANDEM** - if selected, a second controller RCU6201 can be connected to AR620X/RT6201. **AUX INPUT** - if selected, the auxiliary audio signal

Display Contents	Description
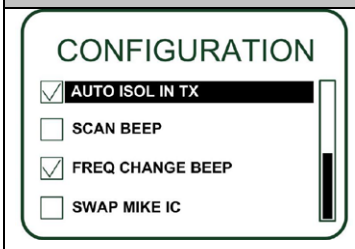 Options 4 to 7	applied to pins P1-4 / pin P1-21 is audible on headphone / speaker. **Note: If the auxiliary audio input is not used it is recommended to deselect "AUX INPUT".** **AUX AUTO MUTE** – if selected the auxiliary audio input will be muted. The auxiliary audio input is also muted if the receiver detects (based on squelch evaluation) a signal. When deselected the auxiliary audio input signal and the receiver signal will intermix continuously. **Note: "AUX AUTO MUTE" is only displayed when "AUX INPUT" is enabled.** **AUTO ISOL IN TX** – if selected a separation between the pilots and passenger intercom circuits is provided while one of the pilots transmits. **SCAN BEEP** - if selected the transceiver generates (only in scan function) a short beep tone to notify a signal presence on the "PRESET FREQUENCY". During signal reception on the "ACTIVE FREQUENCY" switch over to the "PRESET FREQUENCY" is not possible. The audio remains on "ACTIVE FREQUENCY" and a short beep tone is audible. Additionally the "PRESET FREQUENCY" will appear contrast inverted in a sequence of approximately one second. **FREQ CHANGE BEEP** - if selected the transceiver generates a short beep on each change of the "ACTIVE FREQUENCY". **SWAP MIKE IC** - if selected the /IC input functions as /MIKE_SW input and /MIKE_SW input operates as /IC input.
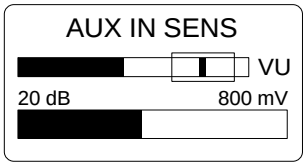	On "AUX IN SENS" page the sensitivity adjustment of the auxiliary audio input (Pin P1-4 / Pin P1-21), in the range 50mV to 8000mV, can be set by turning the "ROTARY ENCODER". This page is displayed only if ENABLE_AUX_IN is activated. The VU meter shows the current signal level of the aux audio input and always displays the highest detected signal value from the last 3 seconds. **Note: Menu available on primary controller**

Display Contents	Description
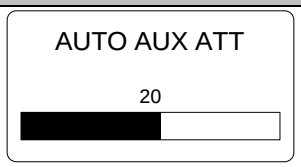	On “AUTO AUX ATT” page the attenuation for the auxiliary audio input can be adjusted between 0 to 40 dB by turning the “ROTARY ENCODER” When intercommunication is initiated (regardless of the intercom activation: “VOX”, or “/IC” discrete input) the signal from auxiliary audio input will be attenuated. After intercommunication is finished the auxiliary audio will revert to its previous level. **Note: Menu available on primary controller**
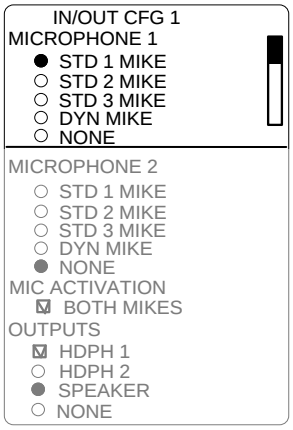	On “IN/OUT CFG 1” page the microphone inputs and headphone outputs for configuration CFG1 can be configured. To scroll the page turn the “ROTARY ENCODER”. “MICROPHONE 1” (at one time only one option can be selected): **STD1 MIKE** - standard microphone input 1 (Pins P1-18/ P1-8) is selected **STD2 MIKE** - standard microphone input 2 (Pins P1-9/ P1-8) is selected **STD3 MIKE** - standard microphone input 3 (Pins P1-19/ P1-8) is selected **DYN MIKE** - dynamic microphone input (Pins P1-6/ P1-5) is selected **NONE** - No microphones is used in microphone path 1 “MICROPHONE 2” (at one time only one option can be selected): **STD1 MIKE** - standard microphone input 1 (Pins P1-18/ P1-8) is selected **STD2 MIKE** - standard microphone input 2 (Pins P1-9/ P1-8) is selected **STD3 MIKE** - standard microphone input 3 (Pins P1-19/ P1-8) is selected **DYN MIKE** - dynamic microphone input (Pins P1-6/ P1-5) is selected **NONE** - No microphones is used in microphone path 2

Display Contents	Description
	"MIC ACTIVATION" **BOTH MIKES** ENABLED: · input /PTT1 (Pin P1-17) activates transmission from microphone path 1 and 2 · input /PTT2 (Pin J1-5) activates transmission from microphone path 2 and path 1 · input /IC (Pin P1-7) activates intercom from microphone path 1 and 2 **BOTH MIKES** DISABLED: · input /PTT1 (Pin P1-17) activates transmission only from microphone path 1 · input /PTT2 (Pin J1-5) activates transmission only from microphone path 2 · input /IC (Pin P1-7) activates intercom only from microphone path 1 "OUTPUTS" **HDPH 1** ENABLED - audio available on headphone 1 output (Pins P1-2/P1-3) **HDPH 1** DISABLED - no audio available on headphone 1 output. **HDPH 2** ENABLED - audio is available on headphone 2 output (Pins P1-20/P1-22), speaker not available. **HDPH 2** DISABLED – no audio available on headphone 2 output, speaker not available. **SPEAKER** ENABLED - audio is available on speaker (Pins P1-1/P1-14), headphone 2 not available **NONE** - no audio on headphone 2 output or speaker output. **Note:** **1 Menu available on primary controller.** **2 Displayed only if MIKE_SW input (Pin J1-24) has Inactive state.**

Display Contents	Description
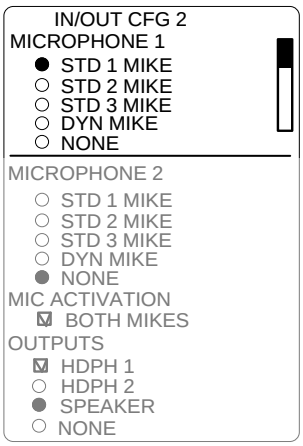	On “IN/OUT CFG 2” page the microphone inputs and headphone outputs for configuration CFG2 can be configured. This page is displayed only if MIKE_SW input (Pin J1-24) has active state. Please remember when MIKE_SW connected in installation both configurations for IN/OUT CFG1 and IN/OUT CFG2 shall be configured To scroll the page turn the “ROTARY ENCODER”. “MICROPHONE 1” (at one time only one option can be selected): **STD1 MIKE** - standard microphone input 1 (Pins P1-18/ P1-8) is selected **STD2 MIKE** - standard microphone input 2 (Pins P1-9/ P1-8) is selected **STD3 MIKE** - standard microphone input 3 (Pins P1-19/ P1-8) is selected **DYN MIKE** - dynamic microphone input (Pins P1-6/ P1-5) is selected **NONE** - No microphones is used in microphone path 1 “MICROPHONE 2” (at one time only one option can be selected): **STD1 MIKE** - standard microphone input 1 (Pins P1-18/ P1-8) is selected **STD2 MIKE** - standard microphone input 2 (Pins P1-9/ P1-8) is selected **STD3 MIKE** - standard microphone input 3 (Pins P1-19/ P1-8) is selected **DYN MIKE** - dynamic microphone input (Pins P1-6/ P1-5) is selected **NONE** - No microphones is used in microphone path 2

Display Contents	Description
	"MIC ACTIVATION" **BOTH MIKES** ENABLED: · input /PTT1 (Pin P1-17) activates transmission from microphone path 1 and 2 · input /PTT2 (Pin J1-5) activates transmission from microphone path 2 and 1 · input /IC (Pin P1-7) activates intercom from microphone path 1 and 2 **BOTH MIKES** DISABLED: · input /PTT1 (Pin P1-17) activates transmission only from microphone path 1 · input /PTT2 (Pin J1-5) activates transmission only from microphone path 2 · input /IC (Pin P1-7) activates intercom only from microphone path 1 "OUTPUTS" **HDPH 1** ENABLED - audio available on headphone 1 output (Pins P1-2/P1-3) **HDPH 1** DISABLED - no audio is available on headphone 1 output. **HDPH 2** ENABLED - audio is available on headphone 2 output (Pins P1-20/P1-22), speaker not available. **HDPH 2** DISABLED – no audio available on headphone 2 output, speaker not available. **SPEAKER** ENABLED - audio is available on speaker (Pins P1-1/P1-14), headphone 2 not available **NONE** - no audio on headphone 2 output or speaker output. **Note:** **1 Menu available on primary controller.** **2 Displayed only if MIKE_SW input (Pin J1-24) has Inactive state.**

Display Contents	Description
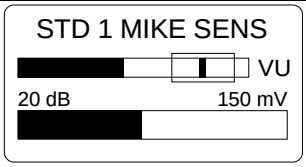 *Note: This page is only displayed if :* *Standard Mike 2 input is selected in IN/OUT CFG1 and MIKE_SW input pin status is **[Inactive]*** *or Standard Mike 2 input is selected in IN/OUT CFG2 and MIKE_SW input pin status is **[Active]***	The sensitivity of standard microphone 1, “STD 1 MIKE SENS”, input is adjustable within the range 9 mV to 1500 mV by turning the “ROTARY ENCODER”. The factory setting is 110 mV. The VU meter displays the current signal level on the audio input and also displays the highest signal value for the last 3 seconds. When speaking normally into the microphone the bar graph should remain within the recommended predefined range **Note:** Adjust the microphone sensitivity by keeping the cockpit noise suppression as high as possible, this will ensure correct modulation. If the sensitivity is adjusted to a smaller value (e.g. 10 mV) the cockpit noises may become louder than for a higher adjustment (e.g. 100 mV). Otherwise, adjusting the sensitivity to a very high value (e.g. 1000 mV), the cockpit noise is very much reduced, but the modulation of the transmitter might be not sufficient. The installer shall perform a communication check after modification of this parameter. Recommended is to perform this check with and without a running engine. Note 2: Menu available on primary controller. **Note:** For installations with high interferences it is recommended to use sensitivity level 27 mV to 1500 mV.
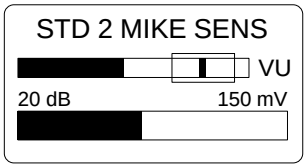 Note: *This page is only displayed if :* *Standard Mike 2 input is selected in IN/OUT CFG1 and MIKE_SW input pin status is [**Inactive**]* *or Standard Mike 2 input is selected in IN/OUT CFG2 and MIKE_SW input pin status is [**Active**]*	The sensitivity of Standard Microphone 2 Input can be adjusted in range from 9 mV to 1500 mV by turning the rotary knob. The default setting is 110 mV. VU meter displays current value of Audio Level from standard microphone input **2** and displays the highest value of Active Audio Level recorded during last 3 seconds. Correct sensitivity is achieved when you are speaking normally into the microphone, this is confirmed by the “Hold max level bar” remaining in “Recommended range”.

Display Contents	Description
	Note 1: The microphone sensitivity shall be adjusted to achieve a correct modulation by keeping the cockpit noise suppression as high as possible. If the sensitivity value is very small (e.g. 10 mV) more cockpit noise will be heard than if the sensitivity value is set to a higher level (e.g. 100 mV). Alternatively if the sensitivity value is very high (e.g. 1000 mV) the cockpit noise will significantly be reduced but the modulation of the transmitter may not be sufficient. After modifying this parameter a communication check shall be done by the installer. It is recommended to perform this communication check with and without engine running. **Note 2:** Menu available on primary controller. **Note 3:** For installations with high interference it is recommended to use sensitivity level 27 mV to 1500 mV
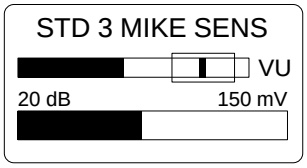 Note: This page is only displayed if : Standard Mike 3 input is selected in IN/OUT CFG1 and MIKE_SW input pin status is [Inactive] or Standard Mike 3 input is selected in IN/OUT CFG2 and MIKE_SW input pin status is [Active]	The sensitivity of Standard Microphone 3 Input can be adjusted in range from 9 mV to 1500 mV by turning the rotary knob. The default setting is 110 mV. VU meter displays current value of Audio Level from Standard microphone input 3 and displays the highest value of Active Audio Level recorded during last 3 seconds. Correct sensitivity is achieved when you are speaking normally into the microphone, this is confirmed by the “Hold max level bar” remaining in “Recommended range”. **Note 1:** The microphone sensitivity shall be adjusted to achieve a correct modulation by keeping the cockpit noise suppression as high as possible. If the sensitivity value is very small (e.g. 10 mV) more cockpit noise will be heard than if the sensitivity value is set to a higher level (e.g. 100 mV). Alternatively if the sensitivity value is very high (e.g. 1000 mV) the cockpit noise will significantly be reduced but the modulation of the transmitter may not be sufficient.

Display Contents	Description
	After modifying this parameter a communication check shall be done by the installer. It is recommended to perform this communication check with and without engine running. **Note 2:** Menu available on primary controller. **Note 3:** For installations with high interferences it is recommended to use sensitivity level 27mV to 1500 mV.
DYN MIKE SENS VU 20 dB 2.5 mV *Note: This page is only displayed if :* *Dynamic input is selected in IN/OUT CFG1 and MIKE_SW input pin status is [**Inactive**]* *or Dynamic Mike input is selected in IN/OUT CFG2 and MIKE_SW input pin status is [**Active**]*	The sensitivity of the Dynamic Mike, “DYN MIKE SENS”, input is adjustable within a range of 0,5 mV to 25 mV by turning the “ROTARY ENCODER”. The factory setting is 3.5 mV. When speaking normally into the microphone the bar graph should remain within the recommended predefined range **Note:** The microphone sensitivity shall be adjusted to achieve a correct modulation by keeping the cockpit noise suppression as high as possible. If the sensitivity is adjusted to a smaller value (e.g. 1 mV) the cockpit noises may become louder than for a higher adjustment (e.g. 25 mV). Otherwise, adjusting the sensitivity to a very high value (e.g. 25 mV), the cockpit noise is significantly reduced but the modulation of the transmitter may not be sufficient. The installer shall perform a communication check after modification of this parameter. Recommended is to perform this check with and without a running engine. Note 2: Menu available on primary controller. **Note:** For installations with high interferences it is recommended to use sensitivity level 2 mV to 25 mV
SPKR VOLUME SOURCE ● PRIMARY CH ○ SECONDARY CH ○ BOTH	One of the three following options may be selected for speaker volume source, “SPKR VOL SRC”, by pressing the “STO” button: PRIMARY CH If “PRIMARY CH” is selected the speaker volume will be adjustable by AR6201-(X0X).

Display Contents	Description
	SECONDARY CH If “SECONDARY CH” is selected the speaker volume will be adjustable by RCU6201. BOTH If “BOTH” is selected the speaker volume will be adjustable by the arithmetic average value from AR6201-(X0X) and RCU6201. **Note 1:** The “SPKR VOLUME SOURCE” shall be set to “PRIMARY CH” if the optional second controller RCU6201 is not available. Note: If optional second controller RCU6201 is not available then SPKR VOLUME SOURCE shall be set to the PRIMARY CH **Note 2:** Menu available on primary controller only
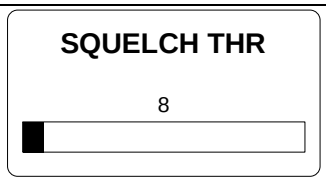	The noise squelch threshold “SQUELCH THR” is adjustable within a range of 6 to 26 by turning the “ROTARY ENCODER”. Minimum Adjustment of 6 means: Weak RF signals can trigger the Squelch threshold and the voice signal might be low combined with a noisy background. Maximum adjustment of 26 means: Only strong RF signals will trigger the Squelch threshold. The voice signal will be audible very clear with very low background noise. Weak RF signals may not trigger the Squelch threshold and therefore the audio may not be heard by the pilots. Note: Adjustment of the “SQUELCH THR” is available via the “PILOTS MENU” at any time. **Note:** Menu available on primary controller only
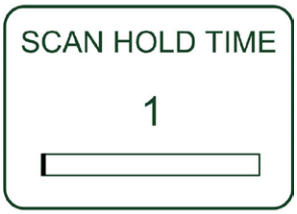	The “SCAN HOLD_TIME” is adjustable within the range of 1 to 60 seconds by turning the “ROTARY ENCODER”. **Note:** 1. For normal airborne operation it is recommended to leave the setting at 1. 2. The default factory setting is 1. 3. The Menu is available only on the primary controller **Note:** Menu available on primary controller only

Display Contents	Description
SIDETON ATT 6	The sidetone attenuation “SIDETONE ATT” is adjustable within the range 0…12 dB by turning the “ROTARY ENCODER”. The attenuation relates to the intercom volume. 0dB = sidetone as loud as intercom signal. 12dB = sidetone signal 12dB less than the intercom signal. Example; If the intercom volume is set to a very low value, then the sidetone volume will be reduced in relation to the intercom volume, irrespective of the sidetone value. The “SIDETONE ATT” parameter is an additional attenuation of the sidetone signal in transmit mode. **Note:** Menu available on primary controller only.
ERASE CHN MEM NO YES	The 620X Transceiver provide two databases to store up to 99 VHF frequencies identified by channel numbers (CH01 to CH99). Both data bases, the “User Channels Database” and “Last Channels Database” can be erased. To erase the data bases; 1. Select “YES” via the “ROTARY ENCODER” 2. Press the “STO” push-button to confirm the selection. **Note:** Menu available on primary controller only
ERASE FREQ LAB NO YES	The AR6201-(XXX) provides a third database, “FRQUENCY LABELS DATABASE”, containing 99 text labels of max 10 characters each. A text label can be assigned to any of the channels (CH01 to CH99), the Labels are stored manually. The “LABELS DATABASE” can be erased. To Erase the data base; 1. Select “YES” via the “ROTARY ENCODER” 2. Press the “STO” push-button to confirm the selection. **Note:** Menu available on primary controller only

Display Contents	Description
FAIL LIST P_NVRAM TEST 0 P_INTERNAL IC 0 P_RXS LOCK 0 P_RECEIVER 0	This page automatically stores and displays information from all failures that occur during operation of the AR6201(X0X). Used for trouble shooting and failure isolation. **Note:** 1. The display can only show 4 (AR6201) monitored failures types (more are available). 2. Move the slide bar via the “ROTARY ENCODER” To view any additional failures. 3. “0” means no failure were detected and stored. 4. “1” means that a failure was detected once or several times and stored. 5. Menu available on primary controller only
ERASE FAIL LIST NO YES	To erase all stored failures. 1. Selecting “YES” via the “ROTARY ENCODER”. 2. Press the “STO” push-button to confirm. Erasing the failure list should not be undertaken by the installer. The failure list will normally be deleted by factory or maintenance shop after a repair is completed **Note:** Menu available on primary controller only
RECALL DEF. NO YES	The factory default settings are the settings of the AR6201-(X0X) when it left the factory after production. To restore the factory settings; 1. Select “YES” via the “ROTARY ENCODER”. 2. PRESS the “STO” push-button to confirm. **Note:** Restoring the factory default settings will overwrite all previous and customized installation settings! Menu available on primary controller only.

2.8 Factory Default Settings

R Enabled £ Disabled ˜ Selected ™ De-Selected

Setting name	Value
DEVICE INFO	
DIMMING INPUT	NONE
BRIGHTNESS	50%
MEMORY OPTIONS	R CHANNEL STORE R STORE LAST CHANNEL
MDE PAGES	R STANDBY FREQUENCY R BATTERY VOLTAGE R CHANNEL MEMORY
LOW BATT THR	10.5 V AR6201-(X2X) 21.0 V AR6201-(X1X)
CONFIG	£ TANDEM £ AUX_IN R AUTO ISOL IN TX £ SCAN BEEP £ FREQ CHANGE BEEP £ SWAP MIKE IC
IN/OUT CFG1	**MICROPHONE 1** ˜ STD 1 MIKE ™ STD 2 MIKE ™ STD 3 MIKE ™ DYN MIKE ™ NONE **MICROPHONE 2** ™ STD 1 MIKE ™ STD 2 MIKE ™ STD 3 MIKE ˜ DYN MIKE ™ NONE **MIC ACTIVATION** R BOTH MIKES **OUTPUTS** R HEADPHONE 1 ™ HEADPHONE 2 ˜ SPEAKER ™ NONE
IN/OUT CFG2	**MICROPHONE 1** ˜ STD 1 MIKE ™ STD 2 MIKE ™ STD 3 MIKE ™ DYN MIKE ™ NONE

Setting name	Value
	MICROPHONE 2 ™ STD 1 MIKE ˜ STD 2 MIKE ™ STD 3 MIKE ™ DYN MIKE ™ NONE **MIC ACTIVATION** R BOTH MIKES **OUTPUTS** R HEADPHONE 1 ˜ HEADPHONE 2 ™ SPEAKER ™ NONE
STD1 MIKE SENS	119 mV visible depending on MIKE configuration of external MIKE Switch
STD2 MIKE SENS	119 mV
DYN MIKE SENS	3.5 mV
SPKR VOL SRC	™ Primary CH ™ SECONDARY CH ˜ BOTH
SQUELCH THR	12
SCAN HOLD TIME	1
SIDETONE ATT	6
EREASE CHANNEL MEM	NO YES
EREASE FREQUENCY LABELS	NO YES
FAIL LIST	
EREASE FAIL LIST	NO YES

Setting name	Value
RECALL DEF.	NO YES

2.9 Typical Installations with Recommended Settings and Wiring Diagrams

2.9.1 Single Seat Glider

Installation Setup for Single Seat Glider

Sub-Menu	Function: / Selection
“SPKR VOLUME SOURCE	PRIMARY CH
“IN/OUT CFG1”:	“MICROPHONE 1”: NONE “MICROPHONE 2”: DYN_MIKE “BOTH MIKES”: Enabled “HEADPHONE 1”: Enabled “SPEAKER”: Enabled With /MIKE_SW not connected (/MIKE_SW input is set to Inactive state) it is only necessary to configure IN/OUT CFG1. If only headphone(s) are used, SPEAKER can be disabled by selecting NONE. If only speaker is used, disable HDPH 1.
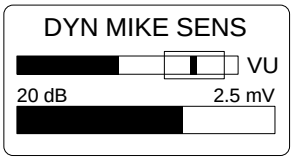	Adjust DYN MIKE SENS to proper level
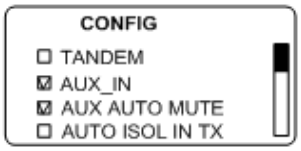	If you want to use an auxiliary input we recommend to configure AUX AUTO MUTE In CONFIG menu set: · AUX IN – ENABLE · AUX AUTO MUTE - ENABLE
“IN/OUT FG2”	N/A
Remarks	Permanent speaker sign is visible on LCD screen. VOX operation suppressed.

Installation Wiring Diagrams

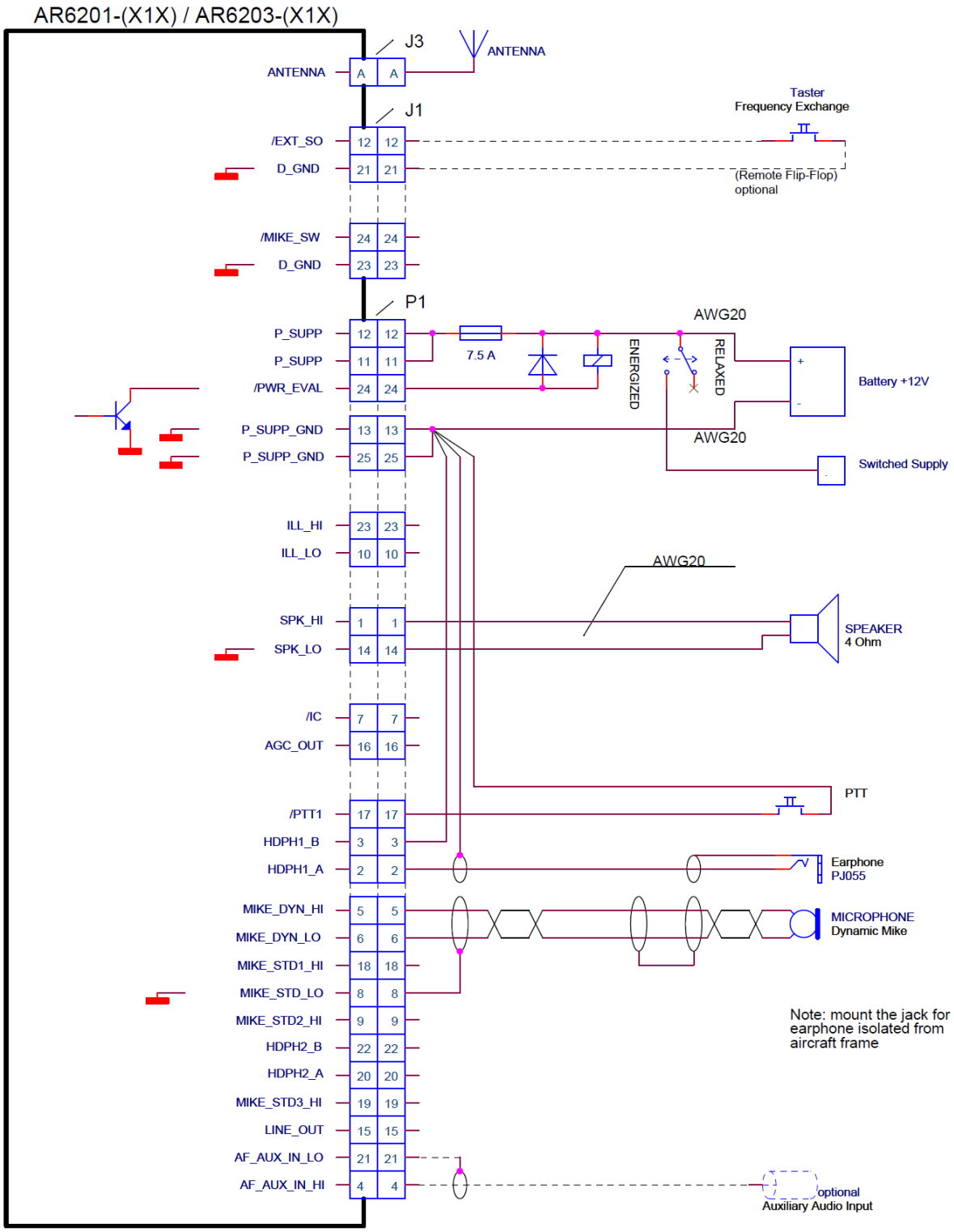

Figure 2-19: Typical Wiring for Single Seat Glider

Note: Frequency Exchange Switch and Switched Supply Relay are optional

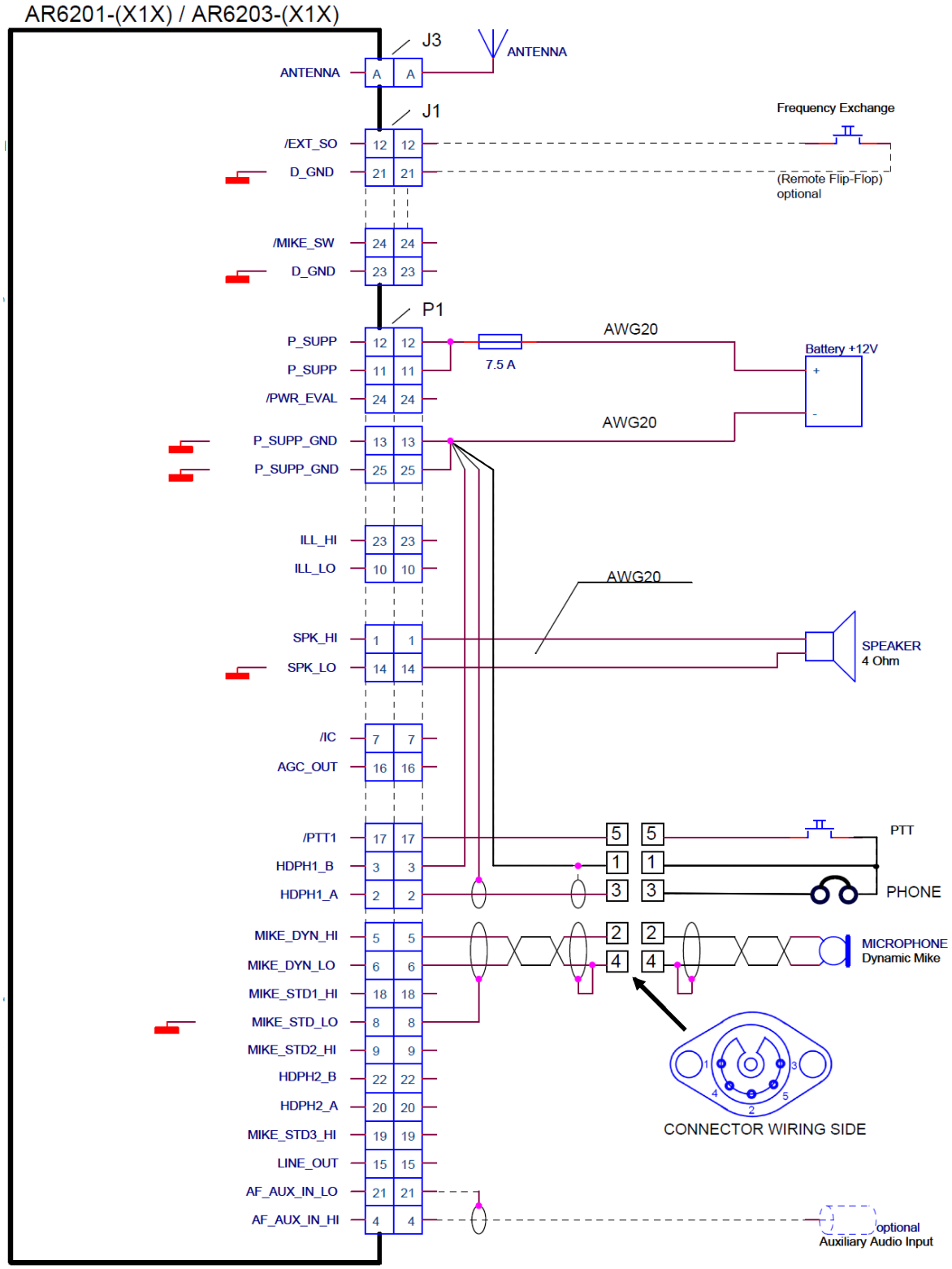

Figure 2-20: Typical Wiring for Single Seat Glider (5-pol DIN Jack)

Note: Frequency Exchange Switch is optional

2.9.2 Twin Seat Motor Glider

Installation Setup for Twin Seat Motor Glider

Sub-Menu	Function: / Selection
“SPKR VOLUME SOURCE	BOTH
“CONFIGURATION”	“SWAP MIKE IC” : Disabled
“IN/OUT CFG1” (/MIKE_SW open):	“MICROPHONE 1” : STD_1 MIKE “MICROPHONE 2” : NONE “BOTH MIKES” : Enabled “HEADPHONE 1” : Enabled “SPEAKER” : Disabled
“IN/OUT CFG2” (/MIKE_SW closed):	“MICROPHONE 1” : NONE “MICROPHONE 2” : DYN_MIKE “BOTH MIKES” : Enabled “HEADPHONE 1” : Enabled “SPEAKER” : Enabled
Remarks	The external switch (connected to pin J1-24 /MIKE_SW) has the following functions: · Open: o Standard microphone is selected. o Speaker is disabled. o Intercom via VOX is possible. · Closed: o Dynamic microphone is selected. o Speaker is enabled. o No Intercom via VOX is possible. o Permanent speaker sign is visible on LCD screen.

Installation Wiring Diagram

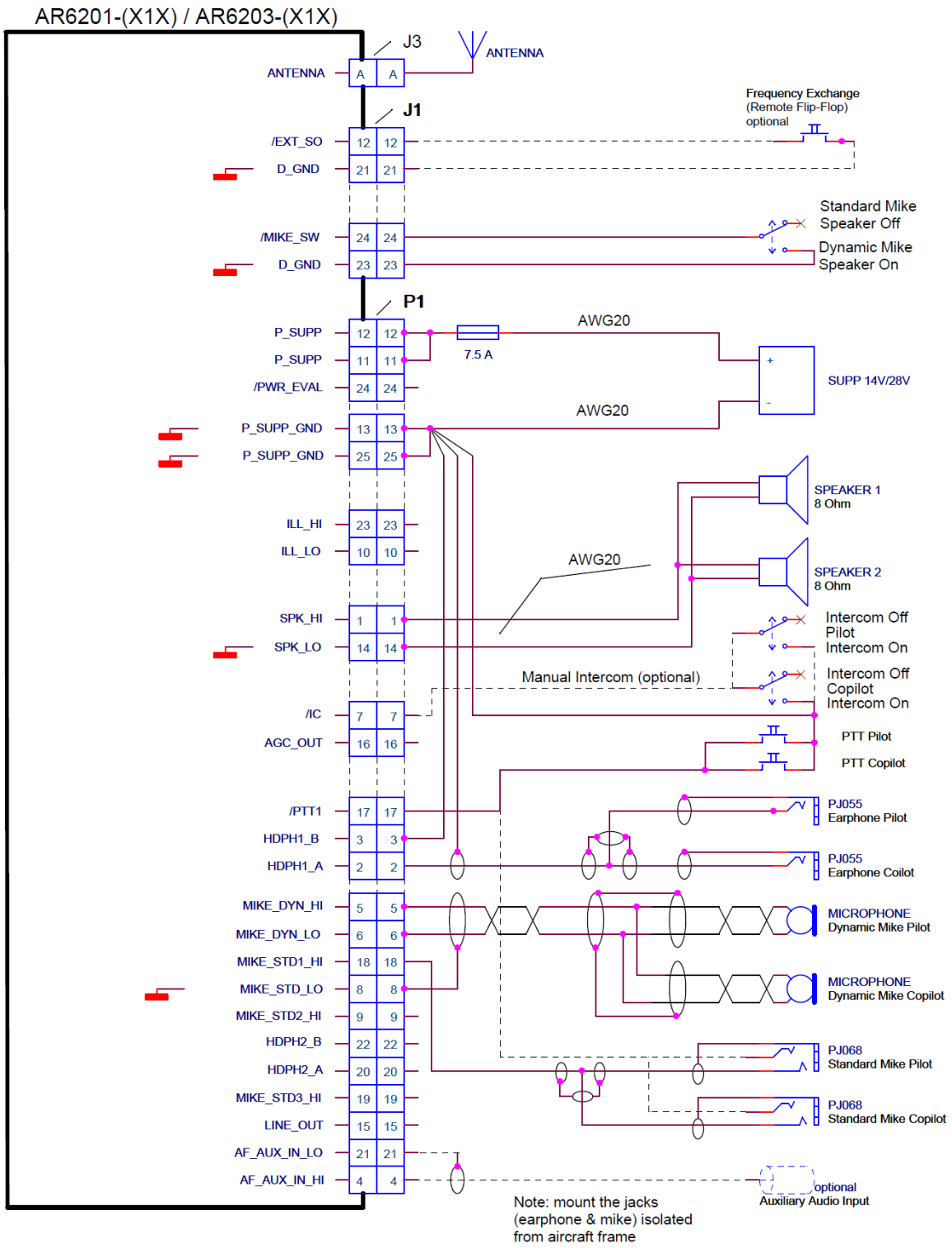

Figure 2-21: Typical Wiring for Twin Seat Motor Glider

2.9.3 General Aviation (GA) Aircraft using Standard Microphones

Installation Setup for General Aviation GA Aircraft using Standard Microphones

Sub-Menu	Function: / Selection
“SPKR VOLUME SOURCE	BOTH
“CONFIGURATION”	“SWAP MIKE IC” : Disabled
“IN/OUT CFG1” (/MIKE_SW open):	“MICROPHONE 1” : STD1_MIKE “MICROPHONE 2” : NONE “BOTH MIKES” : Disabled “HEADPHONE 1” : Enabled “SPEAKER” : Disabled
“IN/OUT CFG2” (/MIKE_SW closed):	“MICROPHONE 1” : STD1_MIKE “MICROPHONE 2” : NONE “BOTH MIKES” : Disabled “HEADPHONE 1” : Enabled “SPEAKER” : Enabled
Remarks	The external switch (connected to pin J1-24 /MIKE_SW) has the following functions: · Open: o Speaker is disabled, o Intercom via VOX is possible. · Closed: o Speaker is enabled o No intercom via VOX is possible o Permanent speaker sign is visible on LCD screen. The standard microphone input is selected regardless of the position of the external switch.

Installation Wiring Diagram

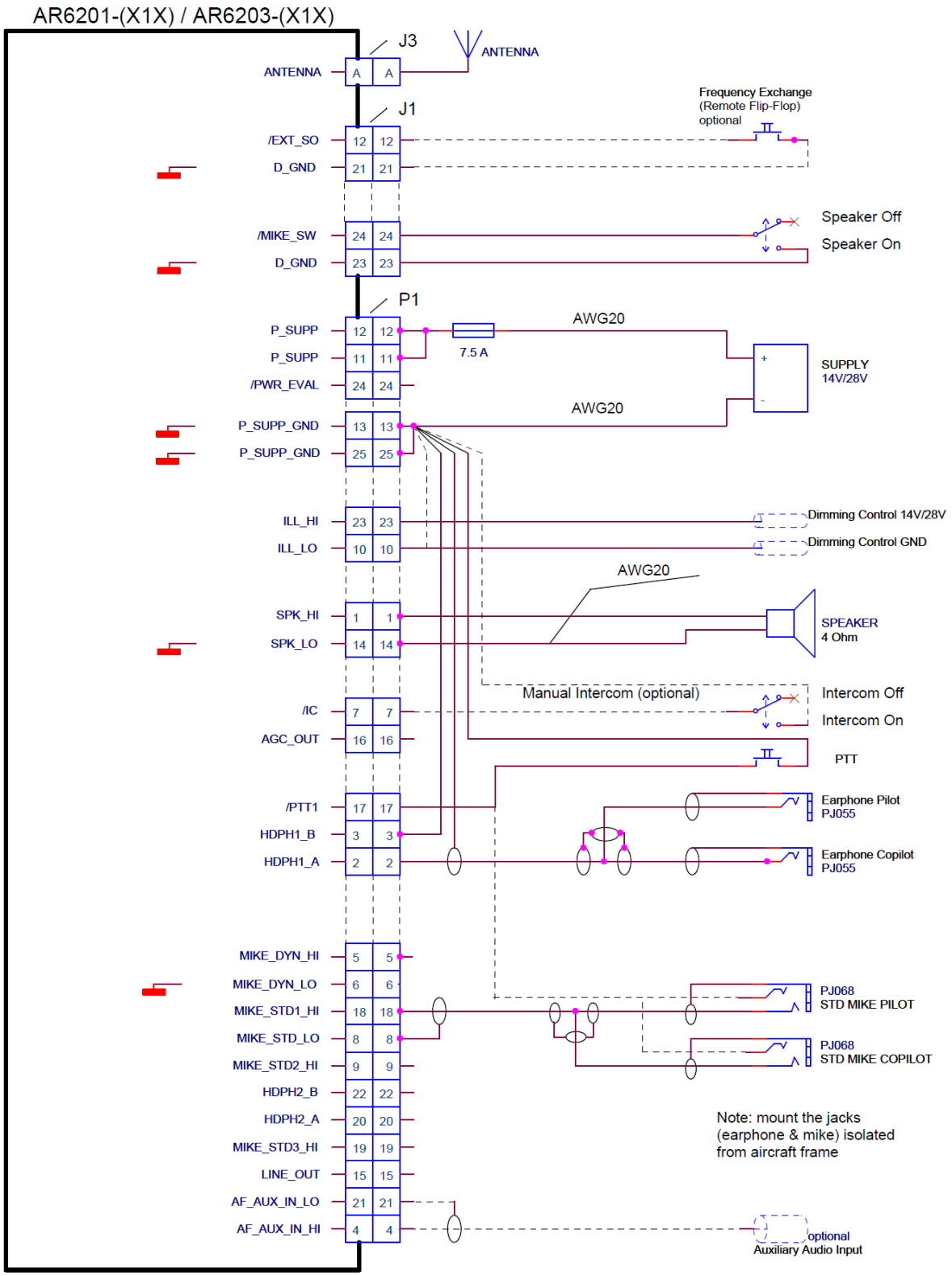

Figure 2-22: Typical wiring for usage of standard hand mikes, earphones and speaker

2.9.4 Installation Setup for individual dual headset configuration (two IC circuit)

Installation Setup for individual dual headset configuration (two IC circuit)

Sub-Menu	Function: / Selection
“SPKR VOLUME SOURCE	BOTH
“CONFIGURATION”	“SWAP MIKE IC” : Disabled
“IN/OUT CFG1” (/MIKE_SW open):	“MICROPHONE 1” : STD1_MIKE “MICROPHONE 2” : STD2_MIKE “BOTH MIKES” : Disabled “HEADPHONE 1” : Enabled “HEADPHONE 2” : Enabled “SPEAKER” : Disabled The standard microphone remains selected for both configurations
“IN/OUT CFG2” (/MIKE_SW closed):	“MICROPHONE 1” : STD1_MIKE “MICROPHONE 2” : STD3_MIKE “BOTH MIKES” : Enabled “HEADPHONE 1” : Disabled “SPEAKER” : Enabled
Remarks	The external switch (connected to pin J1-24 /MIKE_SW) has the following functions: · Open: o Headset 1 for pilot selected (STD1) o Headset 2 for copilot selected (STD2) o Speaker is disabled, o Intercom via VOX is possible. · Closed: o Headset 1 selected (STD1) o Headset 2 disconnected (STD2) o Hand mike selected (STD3) o Speaker is enabled o No intercom via VOX is possible if PTT is active then speaker is muted.

Installation Wiring Diagram

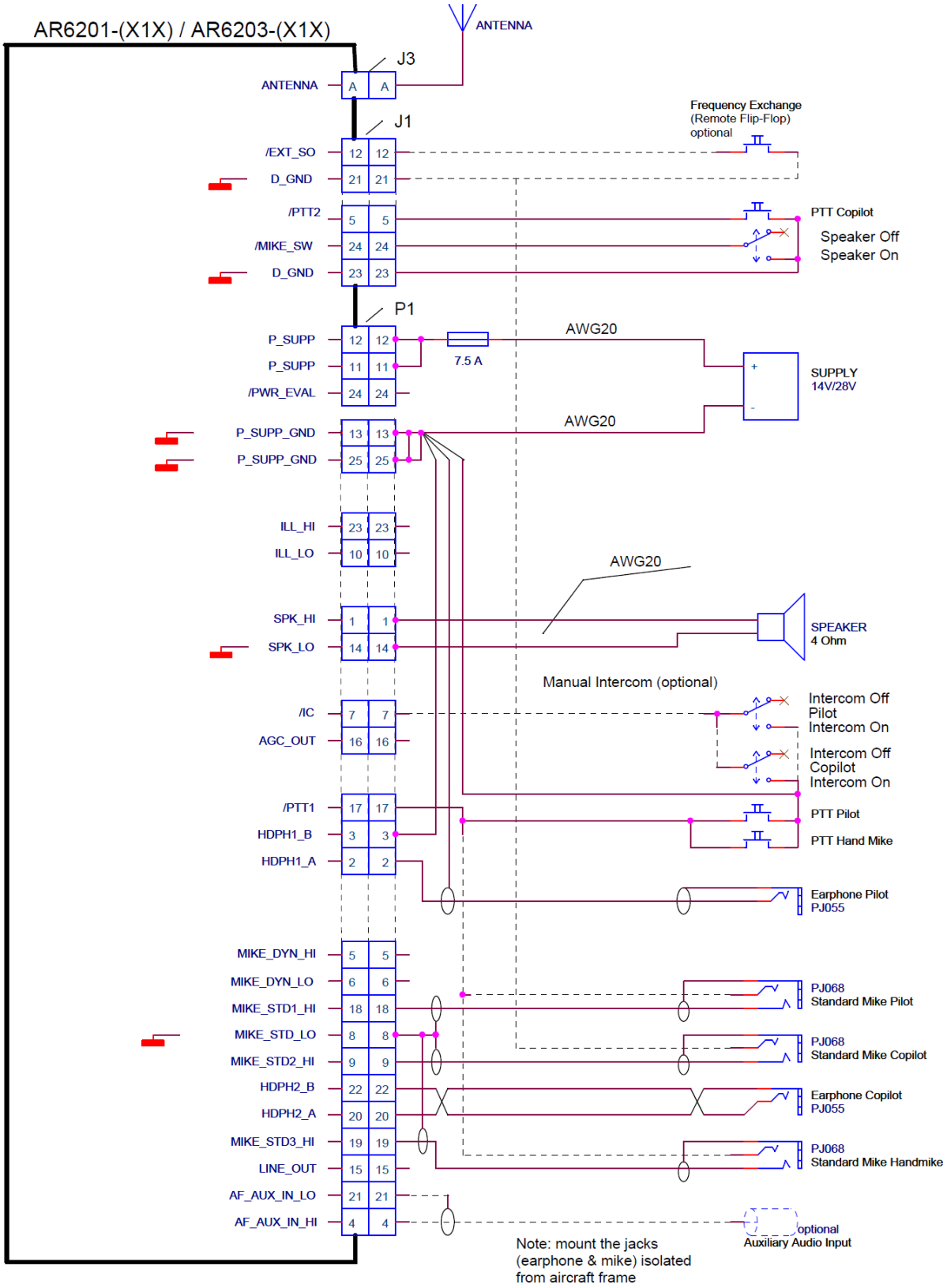

Figure 2-23: Typical dual wiring for usage of standard hand mikes, earphones and speaker

2.9.5 Installation Setup for Twin Seat with AR6201 Tandem Configuration

Installation Setup for Twin Seat with AR6201 Tandem Configuration

Sub-Menu	Function: / Selection
“SPKR VOLUME SOURCE	BOTH
“CONFIGURATION”	“SWAP MIKE IC” : Disabled
“IN/OUT CFG1” (/MIKE_SW open):	“MICROPHONE 1” : STD1_MIKE “MICROPHONE 2” : NONE “BOTH MIKES” : Enabled “HEADPHONE 1” : Enabled “SPEAKER” : Disabled If only headphone(s) are used, SPEAKER can be disabled by selecting NONE. If only speaker is used, HDPH 1 can be disabled. The standard microphone remains selected for both configurations
“IN/OUT CFG2” (/MIKE_SW closed):	“MICROPHONE 1” : STD1_MIKE “MICROPHONE 2” : NONE “BOTH MIKES” : Enabled “HEADPHONE 1” : Enabled “SPEAKER” : Enabled
Remarks	The external switch (connected to pin J1-24 /MIKE_SW) has the following functions: · Open: o Headset 1 for pilot selected o Headset 2 for copilot selected o Speaker is disabled, o Intercom via VOX is possible. · Closed: o Headset 1 selected (STD1) o Headset 2 disconnected (STD2) o Hand mike selected (STD3) o Speaker is enabled o No intercom via VOX is possible o if PTT is active then speaker is muted.

Installation Wiring Diagram

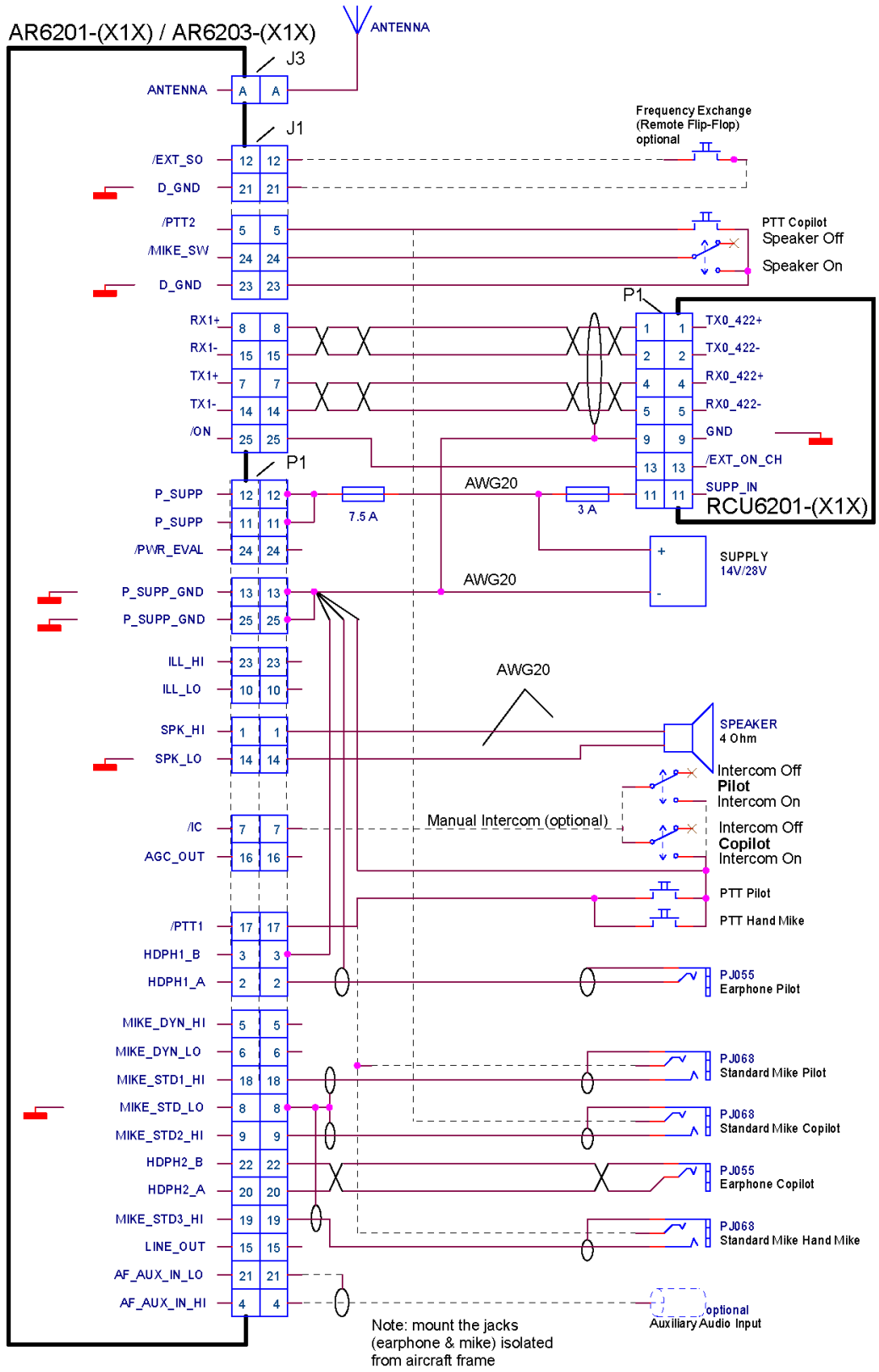

Figure 2-24: Typical Wiring for Twin Seat with AR6201 Tandem Configuration

2.9.6 Wiring for Aircraft with Four Seats (no TANDEM)

Installation Setup for Aircraft with Four Seats (no TANDEM)

Sub-Menu	Function: / Selection
“SPKR VOLUME SOURCE	BOTH
“CONFIGURATION”	“SWAP MIKE IC” : Disabled
“IN/OUT CFG1” (/MIKE_SW open): 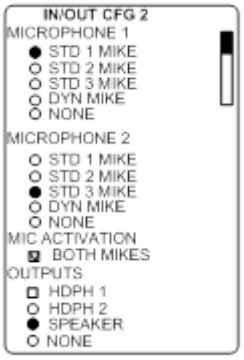 	“MICROPHONE 1” : STD1_MIKE “MICROPHONE 2” : STD3_MIKE “BOTH MIKES” : Enabled “HEADPHONE 1” : Disabled “SPEAKER” : Enabled If only headphone(s) are used, SPEAKER can be disabled by selecting NONE. If only speaker is used, HDPH 1 can be disabled. The standard microphone remains selected for both configurations
“IN/OUT CFG2” (/MIKE_SW closed): 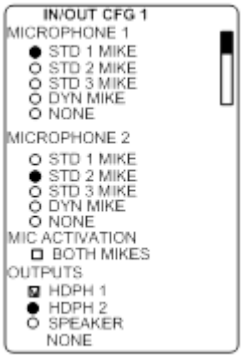 	“MICROPHONE 1” : STD1_MIKE “MICROPHONE 2” : STD2_MIKE “BOTH MIKES” : Disabled “HEADPHONE 1” : Enabled “HEADPHONE 2” : Enabled “SPEAKER” : Disabled

Sub-Menu	Function: / Selection
Remarks	The external switch (connected to pin J1-24 /MIKE_SW) has the following functions: · Open: o Headset 1 and 2 for pilot and copilot selected o Headset 3 and 4 for passengers selected o Speaker is disabled, o Intercom via VOX is possible. · Closed: o Headset 1 and 2 for pilot and copilot selected o Headset 3 and 4 disconnected o Hand mike selected (STD3) o Speaker is enabled o No intercom via VOX is possible If PTT is active then speaker is muted.

Installation Wiring Diagram

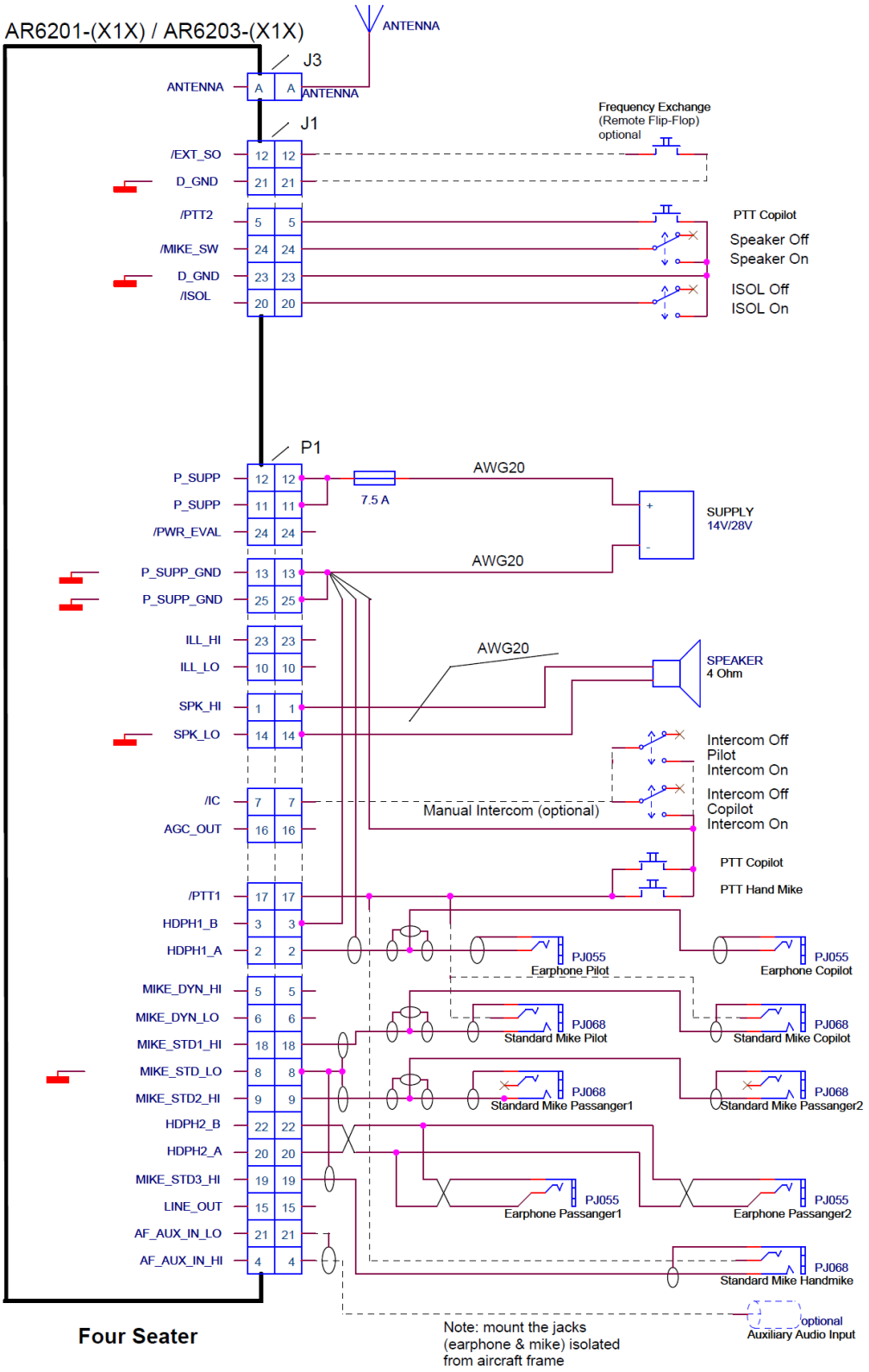

Figure 2-25: Typical Wiring for Aircraft with Four Seats (no TANDEM)

2.9.7 Installation with RT6201

RT6201 with primary controller RCU6201 can be used in all installation wirings presented above. RT6201 with RCU6201 replace AR620X. The connection between RT6201 and RCU6201 is shown in the wiring diagram below. For other equipment connection see dedicated figure above.

Installation Wiring Diagram

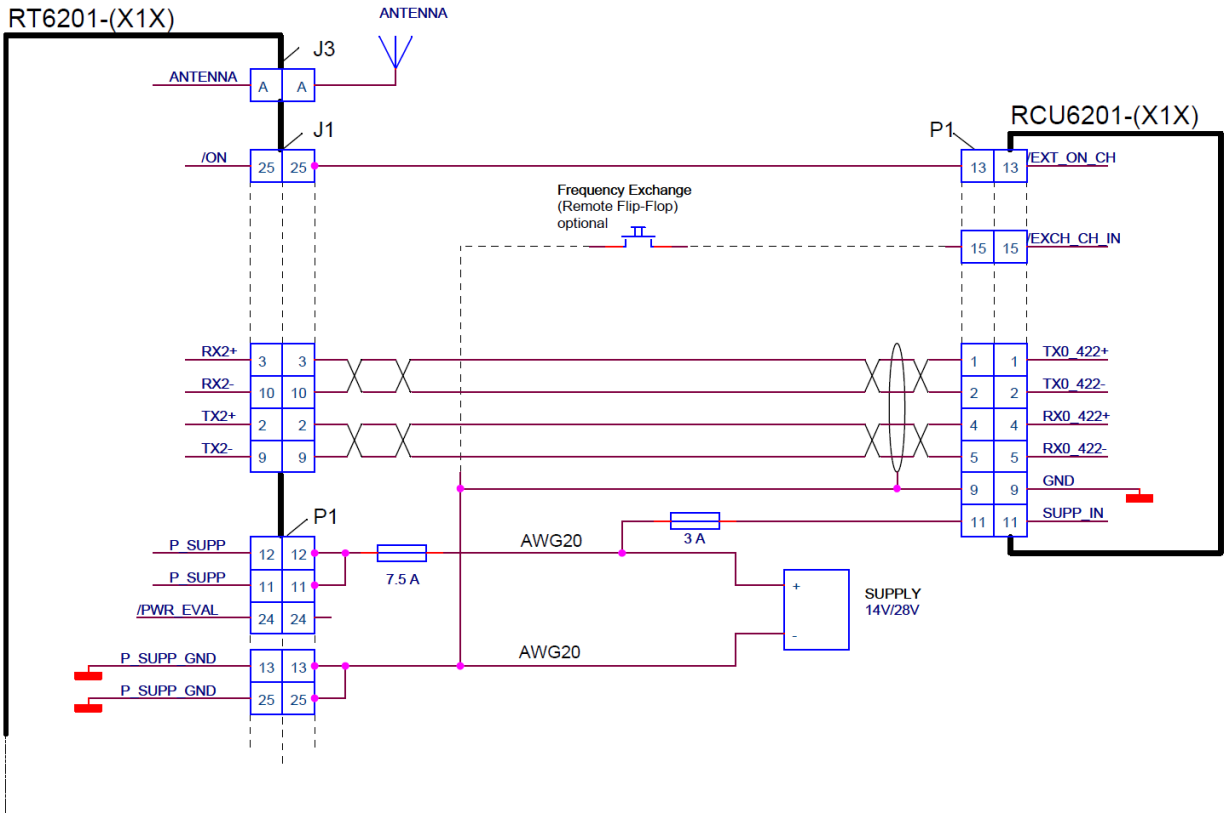

Figure 2-26 Typical Wiring for RT6201 with RCU6201 as Primary Controller

2.9.8 Aircraft with Intercom System

Installation Setup for Aircraft with Intercom System

Sub-Menu	Function: / Selection
“SPKR VOLUME SOURCE	BOTH
“CONFIGURATION”	“SWAP MIKE IC” : Disabled
“IN/OUT CFG1”:	“MICROPHONE 1” : STD1_MIKE “MICROPHONE 2” : NONE “BOTH MIKES” : Enabled “HEADPHONE 1” : Enabled “SPEAKER” : Disabled
“IN/OUT FG2”	“MICROPHONE 1” : STD1_MIKE “MICROPHONE 2” : NONE “BOTH MIKES” : Enabled “HEADPHONE 1” : Enabled “SPEAKER” : Enabled
Remarks	The same configuration applies for balanced and unbalanced wiring.

Installation Wiring Diagram

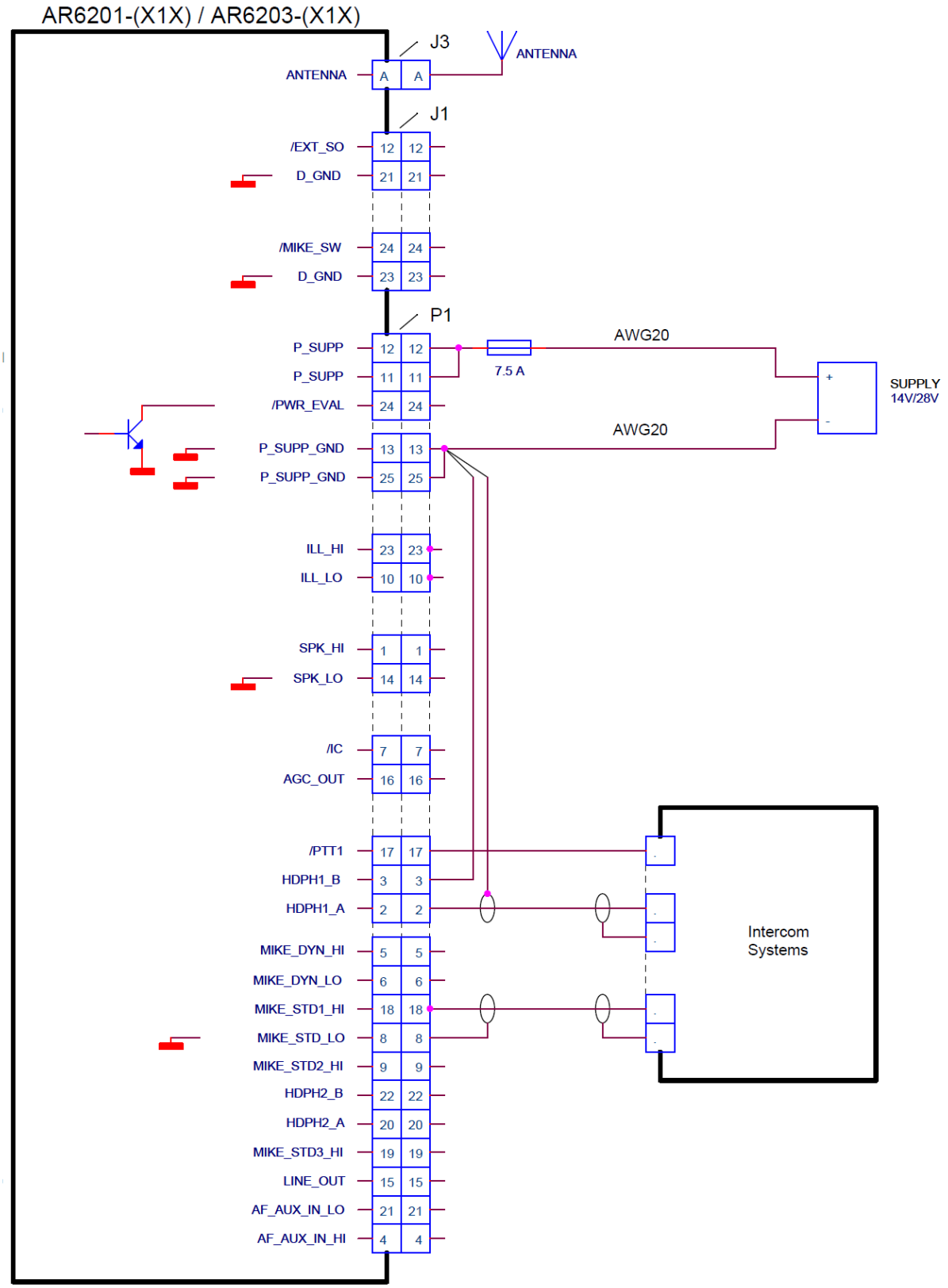

Figure 2-27: Typical wiring for aircraft with Intercom System (unbalanced)

Installation Wiring Diagram

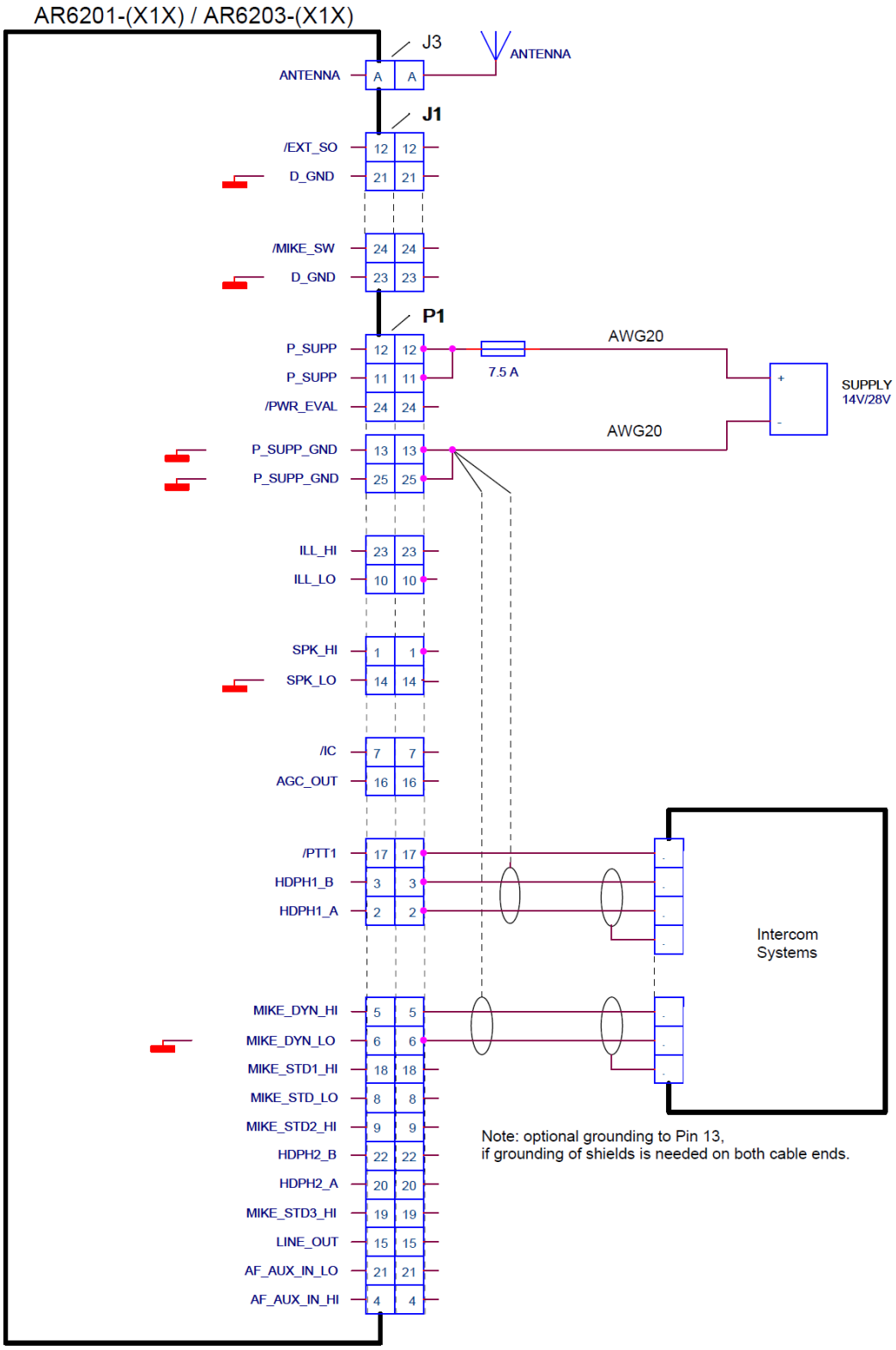

Figure 2-28: Typical wiring for aircraft with Intercom System (balanced)

2.9.9 Installation Setup for Twin Seat with RT6201 Tandem Configuration

Installation Setup for Twin Seat with RT6201 Tandem Configuration

Sub-Menu	Function: / Selection
“SPKR VOLUME SOURCE	BOTH
“CONFIGURATION”	“SWAP MIKE IC” : Disabled
“IN/OUT CFG1” (/MIKE_SW open):	“MICROPHONE 1” : STD1_MIKE “MICROPHONE 2” : NONE “BOTH MIKES” : Enabled “HEADPHONE 1” : Enabled “SPEAKER” : Disabled If only headphone(s) are used, SPEAKER can be disabled by selecting NONE. If only speaker is used, HDPH 1 can be disabled. The standard microphone remains selected for both configurations
“IN/OUT CFG2” (/MIKE_SW closed):	“MICROPHONE 1” : STD1_MIKE “MICROPHONE 2” : NONE “BOTH MIKES” : Enabled “HEADPHONE 1” : Enabled “SPEAKER” : Enabled
Remarks	The external switch (connected to pin J1-24 /MIKE_SW) has the following functions: · Open: o Headset 1 for pilot selected o Headset 2 for copilot selected o Speaker is disabled, o Intercom via VOX is possible. · Closed: o Headset 1 selected (STD1) o Headset 2 disconnected (STD2) o Hand mike selected (STD3) o Speaker is enabled o No intercom via VOX is possible o if PTT is active then speaker is muted.

Installation Wiring Diagram

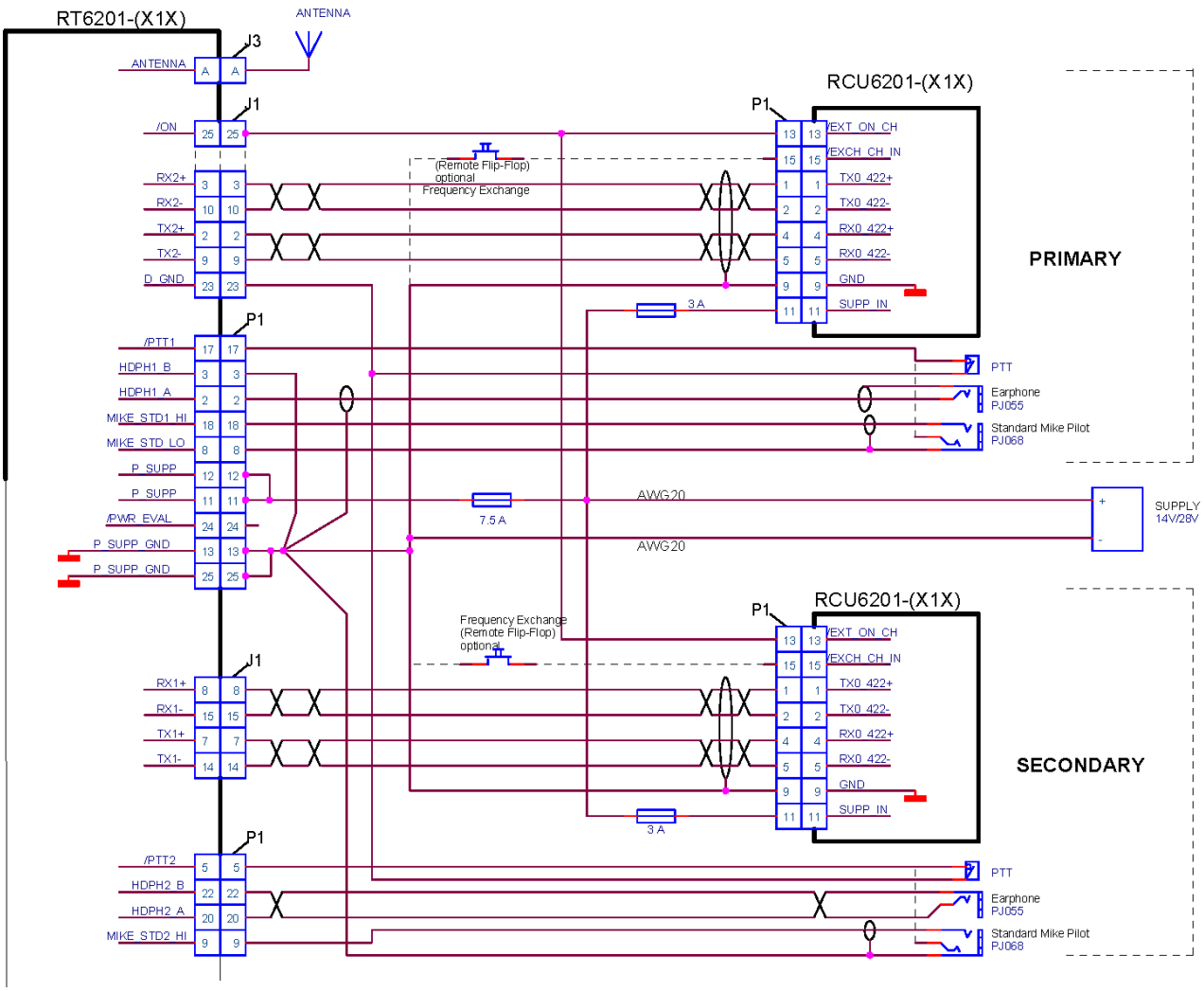

Figure 2-29: Typical Wiring for Twin Seat with RT6201 Tandem Configuration

Note: Setup configuration only via Primary RCU

2.10 Retrofitting an AR4201 with an AR620X

In most cases, a retrofit of the AR4201 with an AR620X will not cause any problems.

However, in a few cases differences may occur due to pin incompatibility.

Connecting the AR620X to an AR4201 wiring will NOT damage the AR620X or the aircraft installation.

2.10.1 Pin Compatibility

Pin No.	AR4201 Pin Name	AR4201 Function	AR6201 Pin Name	AR6201 Function	Full compatible
P1-1	AF-ASYM	Speaker output, unbalanced	SPK_HI	Speaker output, unbalanced	Yes
P1-2	AF-HI	Headphone output, balanced	HDPH1_A	Headphone 1 output, balanced	Yes
P1-3	AF-LO	Headphone output, balanced	HDPH1_B	Headphone 1 output, balanced	Yes
P1-4	AFAUX	Auxiliary audio input, unbalanced	AF_AUX_IN_HI	Auxiliary audio input, unbalanced	Yes
P1-5	MIKE DYN	Dynamic microphone input, high side, unbalanced	MIKE_DYN_HI	Dynamic microphone input, high side, balanced	Yes
P1-6	MIKE GROUND	Ground for dynamic microphone, unbalanced	MIKE_DYN_LO	Dynamic microphone input, low side, balanced	**No**
P1-7	IC	Intercom input	IC	Intercom input	Yes
P1-8	TEMS1	Input for temperature sensor	MIKE_STD_LO	Ground	**No**
P1-9	RXD	RS232-serial-data-line	MIKE_STD2_HI	Standard microphone 2 input, high side, unbalanced	**No**
P1-10	-ILLUMINATION	Illumination, low side	ILL_LO	Illumination, low side	Yes
P1-11	+13.75V	Positive power supply	P_SUPP	Positive power supply	Yes
P1-12	+13.75V	Positive power supply	P_SUPP	Positive power supply	Yes
P1-13	GROUND	Power supply return / Ground	P_SUPP_GND	Power supply return / Ground	Yes

Pin No.	AR4201 Pin Name	AR4201 Function	AR6201 Pin Name	AR6201 Function	Full compatible
P1-14	AF GND MIKE STD GND	Ground	SPK_LO	Ground	Yes
P1-15	AFCU	Normally not used in installation	LINE_OUT	Normally not used in installation	**No**
P1-16	AGC/AFWB	Normally not used in installation	AGC_OUT	Normally not used in installation	**No**
P1-17	PTT	Press to talk	/PTT	Press to talk	Yes
P1-18	MIKE STD1	Standard microphone input, high side, unbalanced	MIKE_STD1_HI	Standard microphone 1 input, high side, unbalanced	Yes
P1-19	CODE PIN	Used for identification of the connection	MIKE_STD3_HI	Standard microphone 3 input, high side, unbalanced	**No**
P1-20	TEMS2	Headphone 2	HDPH2_A	Headphone 2 output, balanced	**No**
P1-21	GNDDATA	Ground	AF_AUX_IN_LO	Ground	Yes
P1-22	TXD	RS232-serial-data-line	HDPH2_B	Headphone 2 output, balanced	**No**
P1-23	ILLUMINATION	Illumination, high side	ILL_HI	Illumination, high side	Yes
P1-24	+13.75V SWITCHED	Power on monitor Switched positive power supply.	/PWR_EVAL	Power on monitor Open collector output. GND if On.	**No**
P1-25	GROUND	Power supply return / Ground	P_SUPP_GND	Power supply return / Ground	Yes

2.10.2 Dynamic Microphone Input

Retrofitting an AR4201 with the AR620X in a typical glider installation with a dynamic microphone is shown below:

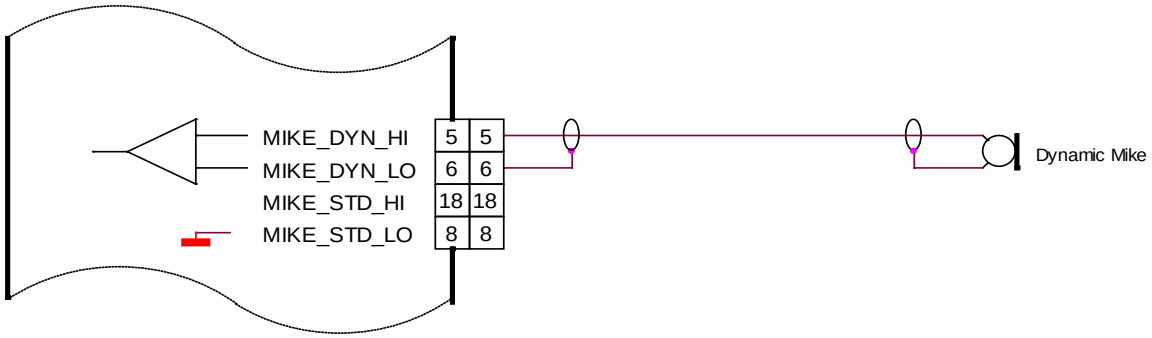

Figure 2-30: AR6201 with wiring interface for AR4201

Connect the cable shielding to pin P1-6, which is the low side input for dynamic microphone. Because in AR620X this input is balanced, the cable shield is no longer connected to ground (unlike it was with the AR4201). In most cases, it is not a problem.
If interference with the microphone signal does occur, it is recommended to carry out the following modification:

Connect Pin P1-6 with Pin P1-8 (the cable shield is grounded). See figure below.

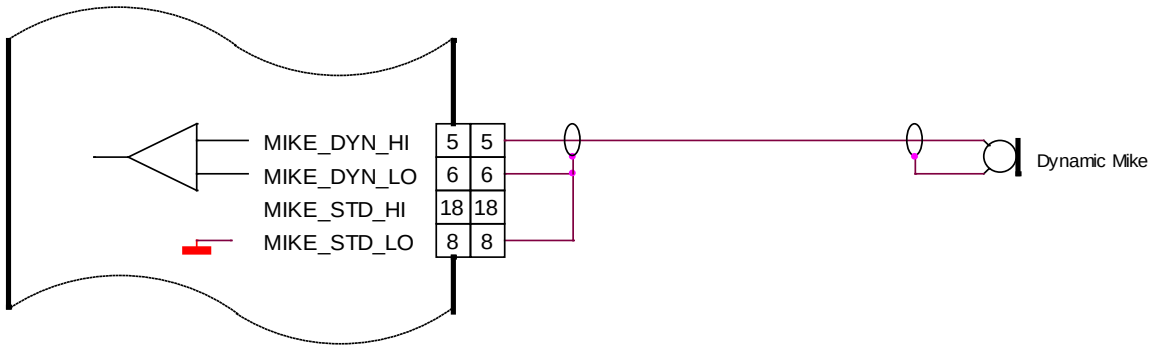

Figure 2-31: Modified dynamic microphone wiring interface for AR6201

2.10.3 Temperature Sensor

The AR620X has no temperature sensor input. Remove wire from pin P1-8 and pin P1-20.

2.10.4 RS-232 Interface

The AR620X has no RS-232 interface for remote control. Remove wire from pin P1-9 and pin P1-22.

2.10.5 AFCU/AGC/AFWB

Not used in aircraft installations, remove pins P1-15 and pin P1-16.

2.10.6 CPIN

No influence in retrofit installation

2.10.7 +13.75V Switched

The AR620X provides on pin P1-24 a low signal when the unit is switched on and a high impedance signal, when switched off. This is not compatible to the AR4201, which provided a positive power supply when switched on and high impedance when switched off.

In cases where slave equipment needs to be switched ON / OFF in sync with the

To switch the transceiver ON/OFF connect a relay to pin P1-24.

2.10.8 PWR_EVAL

The AR620X provides on pin P1-24 a low signal when the unit is switched on and a high impedance signal, when switched “OFF”. This function is different to the AR4201, which provides supply voltage out when switched “ON” and no supply voltage when switched “OFF”.

In cases where slave equipment needs to be switched ON / OFF in sync with the switching ON / OFF the AR6201-(XX) connect a relay to pin P1-24.

2.11 Post Installation Tests

Note: It is assumed that the “Installation Setup” (Chapter 2.8) has been done before the Post Installation Tests will be carried out.

Once the AR620X is installed, complete a test procedure to verify system functionality. Ensure compliance with authority required procedures. Refer to the installation order of the minor change document or use an own approved test protocol for VHF units. The following chapter below provides guidance for such tests.

2.11.1 Mechanical Installation and Wiring Check

Verify all cables are stored securely and shields connected properly to signal ground. Check the movement of aircraft controls to verify there is no interference.

Verify all screws are tight and the connectors on the rear side of the unit are secured.

2.11.2 Power Supply

Check the power supply lines and confirm correct polarity. Confirm that the aircraft power supply is within the specified limits, with and without a running engine.

2.11.3 Receiver / Transmitter Operation

Power up the AR620X and tune it to a local station for a communication test. Verify that the receiver output produces a clear and readable audio and ask the local station for proper readability of the AR6201´s transmit signal. Repeat this communication test with an airborne station within ≈ 20-40 NM (Nautical Miles).

2.11.4 Antenna Check

Check the VSWR (voltage standing wave ratio) over the complete frequency band (e.g. by using a VHF Reflection-Coefficient Meter).

The VSWR ratio should be less than 2:1 and is not acceptable when exceeding 3:1.

2.11.5 Interference Check

Check the AR620X while engine is running and all other avionics/ electrical systems on the aircraft are powered, to verify that no significant interference exists. Check also that the AR620X does not cause significant interference with other systems.

The installer´s standard test procedure may be used for the interference check and the below table can be taken as a reference.

Depending on the individual avionic systems installed in the aircraft, it might be necessary to extend the following checklist accordingly.

Aircraft System	Function	
	OK	NOT OK
DME		
Audio		
Generators / Inverters		
GPS System		
Compass 1		
ADF		
VHF / NAV1 all channels		
VHF / NAV 2 all channels		
Marker Beacon		
Motor(s)		
Engine Instruments		
Stormscope		
Transponder		
Air Data Computer		
Autopilot and Servos		

Power the GPS and make sure that not less than 5 satellites are tracked.

Check the interference between the VHF-COM and the GPS receiver (when activated in NAV mode). Select the following channels/frequencies on the AR620X and on each frequency stay in TX and RX mode for at least 30 seconds. Verify that GPS integrity Flag is always out of view.

Channel	Frequency (MHz)
121.140	121.1416
121.150	121.1500
121.155	121.1500
121.160	121.1583
121.165	121.1666
121.175	121.1750
121.180	121.1750
121.185	121.1833
121.190	121.1916
121.200	121.2000
121.205	121.2000
121.210	121.2083
131.240	131.2416
131.250	131.2500
131.255	131.2500
131.260	131.2583
131.265	131.2666
131.275	131.2750
131.280	131.2750
131.285	131.2833
131.290	131.2916
131.300	131.3000
131.305	131.3000
131.310	131.3083

For the remaining avionic equipment repeat all interference checks during a flight and include all equipment not previously checked out on ground.

A communication performance check in the low, mid and high frequency band of the AR620X should be included. Verify the receiver output produces a clear and understandable audio output. Verify the transmitter by contacting another station and getting a report of reliable communications.

Perform the range check with a station at least 100 m from your own position.

Check the intercom function by talking into the microphone, while the engine is running at cruising rpm. You should hear yourself and/or your co-pilot loud and clear.

Switch “ON” the squelch and check that the normal radio noise, without a present carrier signal, it will be constantly suppressed. The threshold of the squelch can be set in the pilots menu.

2.11.6 Flight Test Check

It is highly recommended to perform flight test as final installation verification. The performance of the AR6201-(X1X) may be verified by contacting a ground station at a range of at least 50 nm while maintaining an appropriate altitude and over all normal flight attitudes. Check the performance in the low, mid and high band frequencies.

2.12 Trouble Shooting

Problem	Possible Reason	Proposed Solution
Intercom function is not working. (You can’t hear yourself when talking into the microphone).	The VOX is switched off or adjusted to a too high value.	Adjust the VOX to a lower value. A value of “-15” is suitable in most cases. Refer to chapter 2.7.
	The intercom volume is adjusted to a too low value.	Adjust the intercom volume to a higher value. A value of “37” produces already a quite loud intercom signal. Refer to chapter 2.7.
	The sensitivity of the microphone input is not sufficient. The level is adjusted to a too high value.	Adjust the sensitivity of the microphone input to a lower value. For most common avionic headsets a setting of 50…120 mV is sufficient. Refer to chapter 2.7.
The VOX threshold cannot be adjusted at all. VOX is always off.	VOX is forced off, because speaker is on.	Switch speaker “OFF”. Refer to chapter 2.7.

Problem	Possible Reason	Proposed Solution
Too high cabin noise during intercom / transmit operation.	The sensitivity of the microphone input is too sensitive.	Adjust the microphone sensitivity to a higher value to ensure the cabin noise is reduced. Recheck transmit operation and/or Intercom function. Refer to chapter 2.7.
Speaker output is not working.	Speaker is switched off	Switch Speaker “ON. Refer to chapter 2.7.
The noise suppression function of the squelch is not working. (Receiver noise is always present).	Some avionic (especially non ETSO/TSO approved avionic) can produce quite high electromagnetic interference, which may be received by AR6201-().	Reduce the interference emitted by the avionic around by improving shielding, distance or grounding. The interference may also be suppressed by adjusting the squelch to a higher value. Refer to chapter 2.7. **Note, that a higher value will cause a reduced sensitivity.**
The display shows a warning or failure message (LOW BATT, STUCK PTT, TX HOT, FAILURE)	Refer to “Warning and Failure Indications” in chapter 3.14	Refer to “Warning and Failure Indications” in chapter 3.14
The Antenna VSWR exceeds 3:1.	Possibly caused by a defective or insufficient counterpoise for the antenna.	Check for sufficient size of the counterpoise and make sure there is no mechanical defect on the antenna.
	The impedance of the antenna cable deviates significantly from 50 Ohm.	Make sure the used antenna cable has 50 Ω impedance and the cable is not pinched or kinked on its way from the radio to the antenna
	Faults on the BNC connectors of the antenna cable.	Check for proper crimp/solder work on the BNC connectors and rectify as far as necessary.

2.13 Continued Airworthiness

The 620X transceiver maintenance is defined as “on condition” only. No scheduled or regular maintenance of this product is required.

It is recommended to check the frequency accuracy of the airborne transceiver after 7 years.

Blank

Section 3 OPERATION

Note 1: In this section the figures for illustrating display content mainly show transceivers working in 8.33 + 25 kHz mixed mode. Dedicated pictures for 25 kHz mode are not explicitly shown, as the display content is very similar (They differ only in number of digits for frequency).

Note 2: The HMI actions described in this section can be performed on primary controller or on optional secondary RCU6201 controller.

Note 3: The following graphics of the AR6201-(XXX) display content show the 8.33 kHz channel spacing for all possible operation modes.

3.1 Safety Instructions

This chapter contains general operating instructions for the AR6201-XXX to ensure safe operation of the VHF transceiver.

Switch OFF the unit before starting or shutting down engines.

To minimize background noise, to ensure a crystal-clear reception by the receiving station and to improve reception quality ensure the microphone is close to the lips and speak in a clear loud voice.

Before startup a speech test is to be performed. If the speech test is carried out close to the ground station the results may be positive even if the antenna cable is broken or a short-circuit exists. In this case at a distance of 5 to 10 km communication might not be possible.

Use only microphones or headsets which are suitable for use in aircraft. It is highly recommended to use the same type microphones or headsets, which are suitable for use in aircrafts. In aircraft made of wood or synthetic materials, in gliders or helicopters, incoming radiation can affect the integrated amplifier of the microphone (feedback). This is noticeable in the ground station by whistling and/or heavy distortion. The described disturbances can occur in different ways on the different transmission frequencies.

If the power supply voltage drops below the “Low Battery Threshold” (default value is 10.5 V), the “LOW BATTERY” message will appear each 3 seconds in the lower part of the display.

IF the power supply voltage drops below 10 V the system enters power saving mode:

- speaker output of the transceiver is automatically switched “OFF”
- the speaker sign will no longer be presented on LCD display
- the pilot must use headphones to continue listening.

3.2 Controls and Indicators

Figure 3-1: controls and indicators on AR6201 or RCU6201

3.2.1 Controls

	Symbol	Description	Main Function
1	I C S Q L	IC/SQL (Intercom/Squelch)	A ”Short press” during normal operation toggles the RX -SQL ON/OFF. A “Long press” during normal operation activates Intercom Menu.
2	MDE	MDE (Mode)	“Short press” during normal operation changes the frequency selection mode. “Long press” during normal operation activates the pilots menu.
3	STO	STO (Store)	”Short press” during normal operation activates storage procedure.
4	S C N	↕/SCN (Exchange/SCAN)	”Short press” during standard mode or scan mode toggles between preset and active frequency. “Long press” activates scan mode.
5		Volume Knob	Switches the transceiver ON/OFF and adjusts volume level of received signal.
6		Rotary encoder	Turning “ROTARY ENCODER” changes the settings of several parameters (frequency, IC-volume, VOX …). Pushing the “ROTARY ENCODER” toggles between the digits and acts as an enter key.
7		Display	

When pressing and holding down a key for at least 2 seconds, the 620X detects a “long press”. Otherwise a “short press” is assumed.

If any action by the user is invalid the whole display is inverted for a short time. For example when pressing a key and the operation is not allowed at that time.

3.2.2 Symbols Shown on the Display

Symbol	Function
IC	Intercom operation active (triggered by VOX or external IC key).
	Intercom operation via VOX is disabled.
TX	The transceiver is in transmit operation
SQL	The squelch function is active. Weak signals will be suppressed.
SCAN	Transceiver operates in scan mode.
STO	The transceiver performs a storage operation.
LOW BATT	
128.225	Inverted figures or letters on display ready to edit

3.3 Start-Up

CAUTION: Do not switch ON the 620X VHF transceiver or RCU6201 during engine start or shutdown

Note: Excessive pulses on the DC bus of the aircraft may cause damage on electrical circuits of any installed instrument.

a. Turn “ON” the VHF transceiver by turning the volume knob clockwise.

b. During PBIT the display indicates the message ”WAIT”, the software version of “Control Head” (CH) and the software version of “Chassis Module” (CM) are indicated.

c. If the PBIT has detected error(s), the display indicates ”FAILURE” (for details see chapter 3.14).

3.4 Receive and Transmit Mode

3.4.1 Receive Mode

If /PTT1 and /PTT2 inputs are inactive, the transceiver remains in receive mode.

In receive mode the headphone(s) outputs (if enabled) provide a mixed signal consisting of:

- Received signal from antenna,
- Intercom signal from intercom circuit one and two,
- Signal from auxiliary input.

In receive mode the speaker output (if enabled) provides a mixed signal consisting of:

- received signal from antenna
- signal from auxiliary input

The signal from the auxiliary input can be muted under certain conditions. For details refer to chapter 3.10.

The signal from intercom can be attenuated or muted under certain conditions. For details refer to chapter 3.11.

3.4.2 Transmit Mode

If /PTT input is active (PTT key is pressed) the transceiver switches to transmit mode. Microphone(s) signals can modulate the transmitter.

- PTT 1 input activates transmission from microphone path 1
- PTT 2 input activates transmission from microphone path 2
- If BOTH MIKES are active/enabled in the installation setup, each input (PTT 1 or 2) activates the transmission from both microphone paths simultaneously.

The “TX” symbol in the left upper corner of the display indicates the AR6201-(XXX) is in transmit mode.

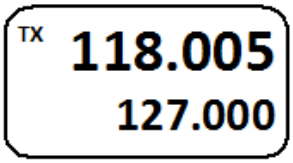

In transmit mode several user actions such as changing frequency selection mode or channel spacing mode, which are normally allowed in receive mode, are blocked. (As an exception in standard mode the “Preset” frequency may still be changeable, even during transmission.)

No intercom operation is possible in transmit mode.

The sidetone (demodulated audio of the emitted signal) is available on the headphone output. The transmit mode automatically deactivates the speaker.

Note: Transmit mode is automatically terminated (return to receive mode) after 120 seconds of continuous transmitting even if PTT is still pressed. In this case "STUCK PTT" is indicated (refer chapter 3.14). For initiation of a new transmission, /PTT line needs first to become inactive.

3.5 Frequency Selection Modes

Following frequency selection modes are available on AR620X and RCU6201:

- Standard mode
- Direct tune mode
- Channel mode
- Scan mode (sub-mode within standard mode)

The first three modes (standard mode, direct tune mode and channel mode) provide different user interfaces for convenient selection of the operating frequency. The three frequency selection modes can be toggled by consecutive short pressing of "MDE" key. They will be toggled in the following order: standard mode, direct tune mode, channel mode, standard mode, and so on. When toggling between the three modes the active frequency always remains the same.

The forth mode is a special mode called SCAN-Mode. Scan mode is a sub-mode of standard mode and is used for monitoring two frequencies at the same time. A 2 seconds press on "↕/SCN" key activates/deactivates the scan function.

Out of the three pages from the frequency selection modes any page can be enabled or disabled in the installation setup but at least one page must remain selected.

3.5.1 Standard Mode

Press the "MDE" key until the standard mode page appears.

The standard mode page displays the active frequency in the top line and preset frequency in the bottom line.

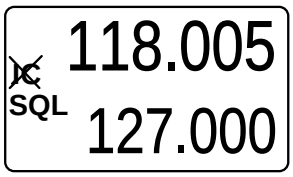

Changing the active frequency is not possible in standard mode (only available in direct tune mode) but changing the preset frequency is possible.

To change the preset frequency

1. Press the “ROTARY ENCODER“ to select the 100 MHz digits. Then rotate the “ROTARY ENCODER” clockwise/counter clockwise to change the frequency.

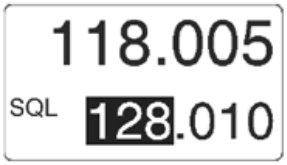

2. Press the “ROTARY ENCODER“ again to select the 100 kHz digits. Then rotate the “ROTARY ENCODER” clockwise/counter clockwise to change the frequency.

3. Press the “ROTARY ENCODER“ again to select the 25/8.33 kHz digits. Then rotate the “ROTARY ENCODER” clockwise/counter clockwise to change the frequency.

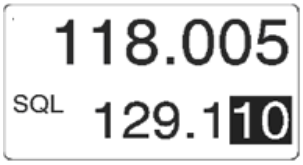

A short press of the “↕/SCN” key toggles between active and preset frequency.

Note: While the transceiver is in transmission mode, the toggle function is disabled.

Press the “STO” key to store the active frequency into the next vacant memory place in the user channels database.

3.5.2 Direct Tune Mode

Press the “MDE” key until the direct tune mode page appears.

Note: If BATTERY VOLTAGE in the installation setup is deselected, this mode is ***not*** accessible! Only standard or channel mode are accessible.

In direct tune mode the active frequency is indicated in the top line. It can be edited by means of the “ROTARY ENCODER” following the procedure. The battery voltage, indicated in the bottom line shows the current value of the supply voltage.

To change the active frequency when in direct tune mode;

1. Press the “ROTARY ENCODER“ to select the 100 MHz digits. Then rotate the “ROTARY ENCODER” clockwise/counter clockwise to change the frequency.

2. Press the “ROTARY ENCODER“, again to select the 100 kHz digits. Then rotate the “ROTARY ENCODER” clockwise/counter clockwise to change the frequency.

3. Press the “ROTARY ENCODER“, again to select the 25/8.33 kHz digits. Then rotate the “ROTARY ENCODER” clockwise/counter clockwise to change the frequency.

Notes:

1. **The changes become active immediately**
2. **Changing the active frequency is possible only when the transceiver is not transmitting**

If wanted press the “STO” key to store the active frequency into the next vacant memory place in the user channels database.

3.5.3 Channel Mode

Note: The channel database provide storage of CH01 to CH99 and LAST1 to LAST9.

Press the “MDE” key until the channel mode page appears.

The channel mode shows data from user channels database (indicated by “CH”), or last channels database (indicated by “LAST”) and labels database on the display.

After selecting channel mode, the active frequency remain indicated in the top line. If this frequency has an already assigned channel number, channel number and the text label appear in the bottom line of the display. If the active frequency has no assigned channel number the indication in the bottom line is “CH--”.

By means of channel number (CH01 to CH99 or LAST1 to LAST9) stored VHF frequencies can be selected. Then the top line shows the corresponding VHF frequency assigned to the specific channel number.

If the same frequency is stored a second time, then the existing stored label for that frequency will automatically be reassigned to the new channel number.

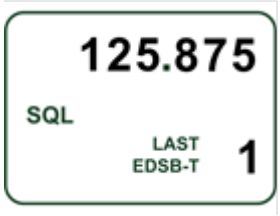

User Channel Database

In order to select a new channel number from **USER** channels database either;

- Make a short press of the “ROTARY ENCODER“.

  or

- Make one clockwise turn of the “ROTARY ENCODER“.

The channel number is now highlighted and the channel can be changed turning the “ROTARY ENCODER“ either clockwise or counter clockwise. At each step the receiver tunes immediately to the displayed VHF frequency.

Note: If user channel CH01 is displayed the first turn counter-clockwise of the “ROTARY ENCODER” will enter to the “LAST” channel no.1. Afirst turn clockwise in channel mode provide navigation up and down between user channels CH01 to CH99.

The channel mode can be deselected by repeated pressing of the “ROTARY ENCODER” or the mode is left automatically after a 5 second timeout.

Last Channel Database

In order to select the new channel number from **LAST** channels database make a counter clockwise turn on the “ROTARY ENCODER“. The channel number is now highlighted and one of the nine last used channels is selectable by turning the “ROTARY ENCODER“ either clockwise or counter clockwise. The mode of channel number selection can be left manually by repeated pressing of the “ROTARY ENCODER“, or the mode is left automatically after a 5 seconds timeout.

When leaving the **LAST** channels database and the last shown frequency is not stored in one of the **USER** cannels database, “CH--”will appear on the display.

Accessing the last channels database will be possible if “STORE LAST CHANNEL” is selected on MEMORY OPTIONS page in the installation setup, otherwise the recently stored VHF frequencies will not be available.

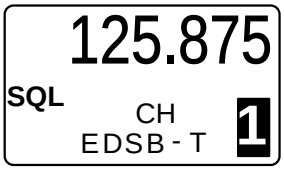

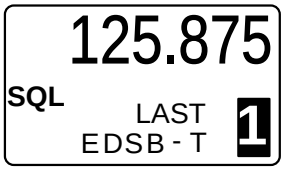

Note: **If the device is operating in the 25 kHz mode a selection of an earlier stored 8.33 kHz channel is not possible. For selection of 8.33 kHz channels, the device has to be operated in 8.33 + 25 kHz mixed mode.**

3.5.4 Scan Mode

In all frequency selection modes;

1. A long press of "↕/SCN" key activates the scan function and changes to STANDARD MODE if activated from CHANNEL or DIRECT TUNE mode.
2. A short push on the "MDE" key or a long press on "SCN" key terminates scan function. After leaving scan function, the device will remain in standard mode (chapter 3.5.1).

In scan mode the display shows both the active frequency on the top line and the preset frequency on the bottom line. The SCAN sign in the display indicates that scan function is active.

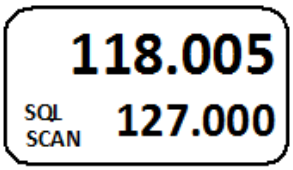

If both the active frequency and preset frequency simultaneously detect a signal, the active frequency takes priority. The preset frequency then inverts and blinks. The arrow sign "▶" in front of the active frequency indicates that this frequency is audible. The figure below shows a sample.

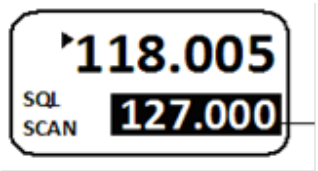

Blinking

If selected in the installation setup an audio notification "beep" tone becomes audible in addition to the blinking preset frequency to indicate the presence of an RX signal on the preset frequency.

Reception on Preset Frequency in Scan Mode

If the preset frequency detects a signal while no signal is present on the active frequency, the transceiver automatically switches over to the preset frequency.

The arrow sign now appears in front of the preset frequency and the signal is audible. A sample display shows the picture below.

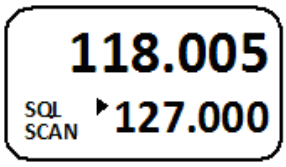

Note: **Transmission always uses the active frequency, even if the monitored frequency is currently audible.**
If TX on the preset frequency is required push the "↕/SCN" key to swap active and preset frequency.

3.6 Squelch

Independent of the selected operation menu, squelch can be toggled "ON" or "OFF" by a short press on "SQL/IC" key.

- If the squelch function is active ("ON") the receiver noise is muted.
- If the Squelch is "OFF" the arrow sign "▶" in front of the Active Frequency stay visible all the time and receiver noise will be audible as long as signal is received.

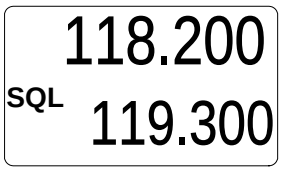

Squelch "ON"

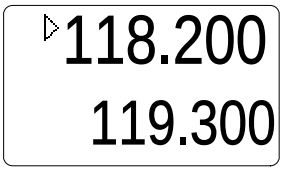

Squelch "OFF"

In the pilots menu, the squelch threshold is adjustable to a convenient trigger level.

3.7 RX Field Strength Indication

The field strength indicator is represented by triangle on the left upper corner of the corresponding frequency and will appear next to the active or preset frequency in all frequency selection modes.

The field strength of the indicated incoming signals is based on measured RSSI level. The three levels displayed are:

Weak Signal Strength	Good Signal Strength	Excellent Signal Strength
RSSI passing squelch level (empty triangle)	-88 > RSSI > -80dBm (half-filled triangle)	RSSI > -80dBm (fully filled triangle)

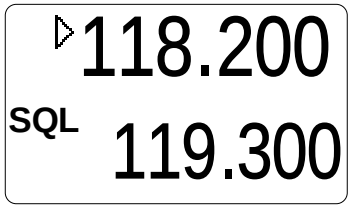

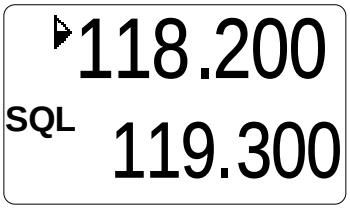

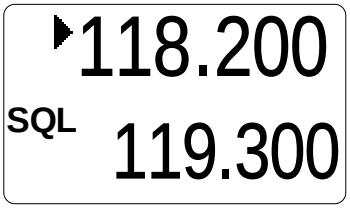

3.8 Channel Spacing Mode

The transceiver provides two frequency channel spacing operation modes (8.33 kHz and 25 kHz), selectable by means of pressing “STO” and “MDE” keys simultaneously for at least 2 seconds.

8.33 kHz channel spacing (left) / 25 kHz channel spacing (right)

Toggling of frequency channel spacing mode is only available for AR620X-(0XX) variants. The AR620X-(1XX) variants cannot be toggled as those are working in 25 kHz Mode only.

In 25 kHz mode 5 frequency digits are shown. Only operating frequencies with a channel spacing of 25 kHz are selectable. If 8.33 kHz channels are not in use this mode provides the advantage of faster tuning since the 8.33 kHz frequency steps are skipped.

In 8.33 and 25 kHz mixed mode 6 frequency digits are shown. The transceiver tunes to all possible frequencies within the aviation VHF frequency band. The channel spacing and operating frequency is derived automatically from the selected and displayed frequency (refer chapter 1.6).

3.9 Storage Function

The VHF transceiver provides two databases:

1. **User channels database** - provides 99 channels identified as CH01 to CH99 or with individual labels with up to 10 characters. Any frequency can be assigned to any CH within the VHF range from 118.000 MHz to 136.9916 MHz by simply pressing the “STO” button. All 99 channels are editable, when selected, after the “STO” button is pressed.
2. **Last channels database** - automatically stores nine last used frequencies, identified and easy to recall as LAST1 to LAST9.

The user channels database can be edited manually by the pilots or, uploaded/edited by using a PC-application connected to an interface port on connector J1 of the AR620X.

3.9.1 Manual Storage Function

To modify the database select CHANNEL STORE option in the MEMORY OPTIONS page in installation setup.

Press the “STO” key to activate the database modification in standard mode, direct tune mode, or channel mode.

During this procedure the display looks similar to the channel mode with the difference “STO” is displayed on the left side of the display. The display

top line displays the active frequency and the bottom line displays the already assigned or next vacant channel number. The channel number can be selected by means of the “ROTARY ENCODER“. The label ”FREE” appears in front of “CHXX” if the selected channel number is vacant. If the selected channel number contains an already stored frequency ”USED” appears.

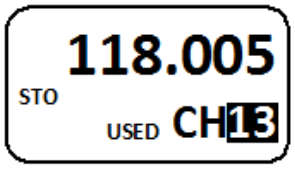

“FREE” and “USED” channel indication.

By entering the storage procedure, the transceiver will first propose the next free channel for storing the active frequency. Beside the proposed channel, any other channel in range 1 to 99 can be selected by turning the rotary knob. For every selected channel “USED” or “FREE” is indicated.

Pressing the “STO” key once again assigns the Active Frequency to the selected channel number, regardless of the channel is “FREE” or “USED” indicated.

The transceiver automatically stores the alphanumeric label assigned to the active frequency.

If the frequency has no label attached, ten underscore digits allow the operator to insert a label. The cursor automatically appears on the first position (see figures below).

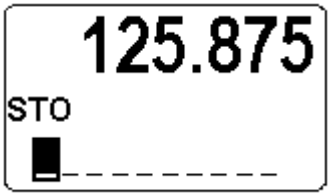

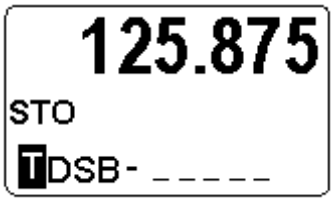

By turning the “ROTARY ENCODER” characters can be selected. Selection works in both directions (example: blank à A à B à C” by turning clockwise and “C à B à A à blank by turning counter clockwise).

Each press of the “ROTARY ENCODER“ moves the cursor to the next position.

A short press of the “STO” key stores the label and a long press of the “STO” key clears the currently edited label.

After storing labels, the transceiver returns back to the previous frequency selection mode (standard mode / direct tune mode / scan function).

If no action occurs in label editing mode within 7 seconds, the transceiver returns to the previous frequency selection mode without storing the frequency and label information.

Stored frequencies can be recalled in channel mode (see chapter 3.5.3).

3.9.2 Automatic Storage Function

The transceiver contains storage function, which automatically stores 9 recently selected VHF frequencies and updates the last channels database during operation in standard mode, direct tune mode and scan-mode. To use this function the STORE LAST CHANNEL option must be enabled in installation setup on the MEMORY OPTIONS page.

When changing to a new active frequency, the previous active frequency is stored “LAST” in memory channel CH1. The frequencies previously located in CH1, CH2 … CH8 are shifted to memory channels CH2, CH3, … , CH9. This algorithm ensures the last 9 used active frequencies are stored. Last used frequencies “LAST” can be recalled in channel mode (see chapter 3.5.3).

3.10 Auxiliary Audio Input

The transceiver has a dedicated auxiliary audio input e.g. for MP3 player connection.

When auxiliary input is enabled in the installation setup, the auxiliary audio input signal is mixed with the received signal from antenna (passing squelch) and the intercom signal (when activated).

When intercom works in ISOLATION mode, then auxiliary audio input signal is provided on headphone 2 output even if radio communication (transmission/receiving) is active.

AUX AUTO MUTE function depends on the AUX INPUT. It is selected via the CONFIGURATION page in the installation setup. This function automatically mutes the audio signal from the auxiliary audio input as long as the AR620X-(XXX) detects (based on squelch evaluation) a RX signal or the user deactivates the squelch manually. If this function is disabled the signal from the auxiliary audio input is permanently audible on the audio output, independently of the received signal or the squelch status.

Automatic aux attenuation functionality is coupled with the auxiliary audio input. The level of the auxiliary input signal attenuates if intercom is activated by VOX or by /IC discrete input. The auxiliary input signal reverts to its previous value after intercom deactivation. The attenuation value can be adjusted within the range from 0 to 40dB.

3.11 Intercom Operation

Intercom operation may be triggered automatically via VOX (with adjustable threshold) or externally via intercom switch. The setting of VOX-threshold and intercom volume is accessible in the pilot intercom menu, in tandem configuration on primary controller only.

For a single block, the primary controller is the one directly connected to VHF transmitter. For a remote VHF transmitter the primary controller is the one connected to primary control interface.

VOX-threshold and intercom volume for the second intercom circuit is controlled from secondary controller RCU6201 (secondary controller is the one connected to secondary control interface).

The transceiver has two internal built in intercom circuits. Therefore up to four headsets can be connected. On the first intercom circuit the pilot and copilot are connected. When the intercom is activated the signals from the microphones are mixed and amplified to become audible on both headphone outputs. This enables internal communication via headsets between both pilots. On the second intercom circuit passengers can be connected.

ALL mode - Everyone connected to the intercom will hear all communications (pilots hear passengers and passengers hear pilots).

ISOL mode - Provides separate intercoms for the pilots (intercom circuit one) and the passengers (intercom circuit two). This allows pilots to communicate with each other, and air traffic, while the passengers are isolated. The passengers on the intercom circuit two can hear auxiliary audio (for example from mp3 player) and can communicate with each other.

External “ISOL” input provides possibility to switch between ALL mode and ISOL mode. If the /PTT1 input is active and ISOL is active the passenger intercom operation on second intercom circuit is still possible.

In transmission mode intercom operation is degraded. During receive mode the intercom operation may be activated automatically via VOX (with adjustable threshold) or using the external intercom switch.

If intercom operation is active the “IC” sign is displayed.

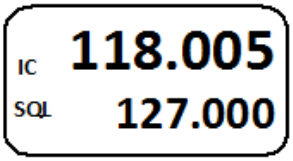

Activation of Intercom Operation via VOX

Via VOX intercom operation is automatically activated (threshold adjustable in the intercom menu). With additional RCU6201 VOX threshold for first intercom circuit is adjustable from primary controller (AR620X or RCU6201) and for second intercom circuit from second controller RCU6201.
Intercom activation via VOX is not possible if:

- Speaker is enabled (see next chapter)
- User switched the VOX off

In both cases the VOX is disabled and the display shows the ~~IC~~ sign to indicate that activation via VOX is not possible.

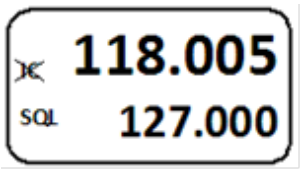

Activation of Intercom Operation via Intercom Switch

Via intercom switch (pin P1-7) independent of VOX or speaker status (enabled/disabled) the intercom operation can be activated externally. The external intercom switch has priority. During intercom operation the Speaker output is disabled.

3.12 VOX & Speaker Operation

Depending on wiring and installation setup, the speaker may always be enabled or the speaker can be enabled/disabled by switching configurations using external switch /MIKE_SW.
When speaker is enabled and is not muted the display will show the sign.

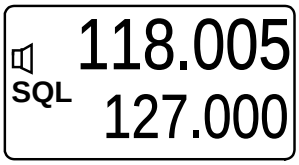

With active speaker enabled in audio configuration, the VOX is always forced “OFF” and intercom via VOX is not possible (to avoid oscillation of VOX due to acoustical feedback). The AR6201-(XXX) disables VOX if enabling speaker in active audio configuration.

With the transceiver in transmission mode the speaker output is muted (switched “OFF”) even if speaker is enabled in current audio configuration in one of the following cases:

- Intercom is activated by external intercom switch (I/C input).
- Power is below 10 V.

3.13 Menus

During normal operation in one of the frequency selection modes the following menus can be activated:

- Intercom menu for adjustment of intercom volume and VOX threshold.
- Pilots menu for adjustment of panel brightness and squelch threshold.

3.13.1 Intercom Menu

A long press (2sec) on “IC/SQL” key activates the intercom menu starting with intercom volume menu as first page after entering this menu. A short press on “IC/SQL” key provides toggling between the pages.

A long press on “MDE” key terminates intercom menu, or the menu automatically terminates after 5 seconds timeout.

The intercom menu consists of two pages:

- Intercom volume (first page)
- Intercom VOX (second page)

Intercom Volume Menu

The active frequency is indicated in the top line of the display, while the “IC VOLUME” label and below this a bar graph with numerical value are show in the bottom line.

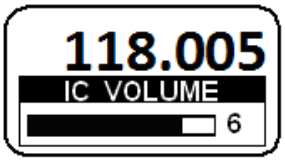

By means of the “ROTARY ENCODER“ the intercom volume can be changed from 0 (minimum volume) to 46 (maximum volume). The intercom volume setting affects the intercom audio signal and sidetone signal routed to the headphone.

Intercom VOX Menu

The active frequency is indicated in the top line of the display, while the “IC VOX” label and below this a bar graph with numerical value are shown in the bottom line.

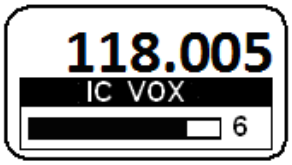

By means of the “ROTARY ENCODER“ the intercom VOX threshold can be changed from -30 (most sensitive, even a very low microphone signal already triggers the VOX threshold for Intercom operation) to +10 (VOX is less sensitive and only high microphone signals trigger the VOX threshold for intercom operation).

Note: At a setting for VOX threshold of -15 a convenient behavior of the VOX should be achieved in most aircrafts. This requires that mike sensitivity had been correct adjusted (installation setup). If the mike sensitivity is incorrect adjusted, VOX may work not satisfying.

By changing the VOX threshold level to above +10, VOX can be switched “OFF”. In this case, “OFF” replaces the numerical value indication (see figure below):

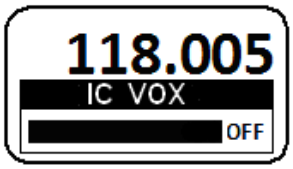

With VOX switched “OFF”, activation of intercom operation using the external intercom switch (/IC discrete input) is still possible at any time.

The VOX threshold level cannot be adjusted if the VOX is forced to be “OFF” (due to Enabled speaker in current audio configuration).

In tandem installation AR620X adjust VOX threshold for first intercom circuit, RCU6201 adjust VOX threshold for second intercom circuit.

Note: In installation with the second controller AR620X adjusts VOX threshold for Microphone 1 only while RCU6201 adjusts VOX threshold for microphone 2 only.

3.13.2 Pilots Menu

Press the “MDE” key for 2 seconds to enter the pilots menu starting with BRIGHTNESS menu as first page after entering this menu. Toggling between the pages is provided by a quick press of the “MDE” key, or by a quick press of the “ROTARY ENCODER“.

To exit the pilots menu either

- Wait 5 seconds without any switch selections.
- Press the “MDE” key again for 2 second,
- Press the “ROTARY ENCODER“ when the SQUELCH setting page is visible,

The pilots menu consists of two pages:

- BRIGHTNESS (first page)
- SQUELCH (second page)

BRIGHTNESS

The active frequency is indicated in the top line of the display. Underneath the active frequency, the “BRIGHTNESS” label appears in combination with a bar graph and the selected value.

The panel brightness for display illumination and pushbuttons can be changed from 0 (illumination off) to 100 (maximum brightness) by turning the “ROTARY ENCODER“.

Note: This page is not available if in installation setup the dimming input is set to 14 V or 28 V. For this setting the aircraft dimming circuit controls the brightness parameters.

SQUELCH

By a short press of the push button of the rotary encoder the next page **“SQUELCH”** is displayed. The active frequency is indicated in the top line of the display. On the bottom line is indicated ”SQUELCH” with bar graph and value.

By another press on the “MDE” key change to SQUELCH and by means of the “ROTARY ENCODER“, the setting can be changed. The active frequency stays indicated in the top line of the display and on the bottom line “SQUELCH” label appears together with a bar graph and the current value.

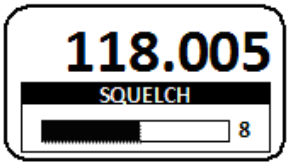

By turning the “ROTARY ENCODER” the squelch threshold can be adjusted:

- from 6 (very weak signals are audible with high noise content; squelch opens at about -105 dBm)
- to 26 (only quite strong signals are audible with low noise content; Squelch opens at about -87 dBm).

3.14 Warning and Failure Indications

Display Contents	Description
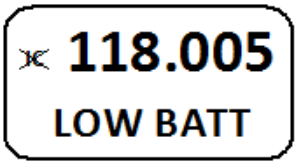 Reappear every 3 seconds.	“LOW BATT” is indicated if the supply voltage of the transceiver is below the threshold defined in the installation setup. The transceiver is still operable but may have a reduced performance depending on supply voltage. **Possible reasons for indication:** · Accumulator capacity problems (gliders), · Power interrupts, · General power supply problems, · Setting for low battery threshold too high
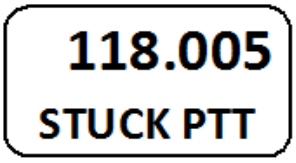 Reappear every 3 seconds.	“STUCK PTT” is indicated after 120 seconds of continued transmission. The transceiver goes back to receive mode even if the PTT line is still active (GND). For initiating a new transmission, the PTT line needs first to become inactive (open). **Possible reasons for indication:** · Transmission lasts more than 120 seconds. · PTT-key is stuck. · PTT line permanently grounded (short circuit in installation).
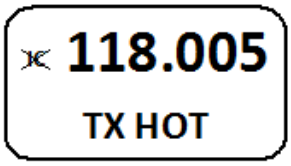 Reappear every 3 seconds.	“TX HOT” is indicated if the internal device temperature exceeds +90°C. Transceiver is still operable. Performance of transmitter is reduced. **Possible reasons for indication:** · Very hot environmental temperature, long transmissions times and insufficient airflow conditions.

Display Contents	Description
118.005 FAILURE Reappear every 3 seconds.	The transceiver has detected an internal failure during normal operation. Depending on failure reason, the device may be still operable with degraded performance or not operable at all. **Possible reasons for indication:** · Outside specified environmental conditions · HW or SW failure inside the transceiver. **Contact maintenance shop for assistance.**
FAILURE PRESS ANY KEY	The transceiver has detected an internal failure during start up. Depending on failure reason, the device may be still operable with degraded performance or not operable at all. **Possible reasons for indication:** · Outside specified environmental conditions · HW or SW failure inside the transceiver. **Contact maintenance shop for assistance.**
FAILURE	The transceiver has no communication with the controller. Depending on failure reason, the device may be still operable with degraded performance or not operable at all. **Possible reasons for indication:** · Problem with inter-wiring **Contact maintenance shop for assistance.**

Blank